具環保價值之新產品

An Environmental Protection Valued Product

ISO 14001 登錄證書
編號：6X0E003-03號

ISO 9001 登錄證書
編號：6X0Y001-08號

南亞塑膠棧板

NAN YA PLASTIC PALLET

南亞塑膠工業股份有限公司

NAN YA PLASTICS CORPORATION

目錄・CONTENTS

1 前言
INTRODUCTION

2 南亞塑膠棧板之優異特性
THE SUPERIOR PROPERTIES OF NAN YA PLASTIC PALLET

3 塑膠棧板功能測試項目
TEST ITEMS FOR PLASTIC PALLET
塑膠棧板物性標準表
PHYSICAL PROPERTY STANDARDS OF PLASTIC PALLET

4 南亞塑膠棧板之種類 D型/DJ型/DC型/DCJ型
SPECIES OF NAN YA PLASTIC PALLET D Type / DJ Type / DC Type / DCJ Type

9 SC型/SCJ型/SJ型
SC Type / SCJ Type / SJ Type

16 F型/FC型/FCJ型
F Type / FC Type / FCJ Type

23 E型/ECJ型/EJ型
E Type / ECJ Type / EJ Type

27 FCU型
FCU Type

30 南亞塑膠棧板的尺寸管制標準
SIZE CONTROL STANDARD OF NAN YA PLASTIC PALLET
訂製品
CUSTOM-MADE

31 南亞塑膠棧板使用注意事項
TERMS & CONDITIONS

32 選購塑膠棧板型式指南
GUIDE TO PURCHASE A SUITABLE PLASTIC PALLET

33 南亞塑膠棧板的標準色水
STANDARD COLORS OF NAN YA PLASTIC PALLET

34 南亞塑膠棧板之實用例
APPLICATIONS OF NAN YA PLASTIC PALLET

近百年來，人類文明不斷地快速進步，對地球資源亦竭盡地使用，同時也造成環境的改變、破壞，而逐漸影響人類的生活與健康。就以工廠大量使用之木棧板來說，由於來自於大量砍伐森林，致使林地減少及林相破壞，造成地球產生溫室效應，人類居住的環境氣溫及海平面不斷升高，可居住的面積逐漸減少，旱象、洪災不斷地發生。

即使目前以大量造林力圖改善，但是由於新植樹種生長緩慢，能否替代砍伐之樹種，以及對環境的影響仍是一大變數。同時損壞的木棧板之鐵釘、碎屑及產生之廢棄物處理問題，亦使各廠家深感困擾。

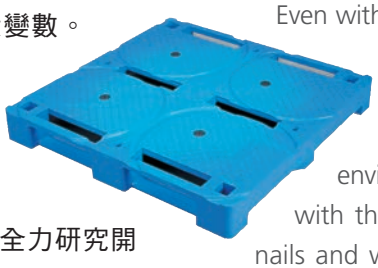

南亞塑膠三部有鑑於此，遂全力研究開發塑膠棧板代替木棧板，以期減少森林之砍伐，為環保盡一份心力。

For this century, with the fast advancement of civilization, the earth's natural resources have been quickly exhausted, thereby causing environmental destruction and eventual influence on human living. For example, the factories largely use wooden pallets have unfortunately reduced forested area due to tree-felling. As a consequence, the earth's greenhouse effect caused the rising of atmosphere temperature and sea level, decreasing in human habitat, and pouring rain calamities happening continuously.

Even with human's attempt to grow more trees than logged, the difference between the species grown and logged still varies the environment. Moreover, how to deal with the broken wooden pallet scraps, nails and wastes to reduce environmental damage is still a big problem for all factories.

Due to above reasons, Nan Ya Plastics Corp. intended to develop the plastic pallets, to substitute for the natural wooden pallet, and to proceed in support of the ideals of environmental protection and enhancement of civilization.

絕佳的物性：

- 以PP（聚丙烯）為材質者，剛性佳、耐熱變形溫度高達90℃。
- 以HDPE（高密度聚乙烯）耐寒配方為材質者，耐衝擊性、耐低溫性佳（可達-20℃）。
- 耐候性佳，耐酸鹼及化學藥品侵蝕。

產品耐久性佳：

- 特殊結構設計，使用壽命長。
- 不需維修、節省處理費用。

外觀特色：

- 無鐵釘、碎片及凸刺銳角，不會損傷貨物及操作人員。
- 具止滑墊裝置，防滑安全性佳。
- 可互相堆疊嵌合儲存之設計，節省倉租及運輸成本。
- 易於清洗，不會滋生細菌或黴菌、防白蟻；衛生性佳。
- 產品種類齊全且價格低廉，可媲美木棧板。

符合CNS及JIS嚴格之功能測試：

- 完全符合CNS及JIS標準中對塑膠棧板之功能測試要求，如CNS 8170、13018及JIS Z 0602、Z 0606…等。
- 亦可依客戶特殊需要進行不同條件之測試。

環保性佳：

- 可100%再回收利用，符合新一代環保標準之要求。
- 於2019年5月獲得環境部審查核准使用「環保標章」。
- 符合94 / 62 / EC重金屬含量管制標準。
- 不含歐盟RoHS所管制之環境管理物質。
- 2022年7月南亞FP材質(以100%再生PP製造)塑膠棧板獲得台灣環保署審查核准使用「環保標章」，證書編號:環標字第20185號。

Excellent physical properties :

- Made of polypropylene, excellent rigidity strength, heat distortion temperature is up to 90℃.
- Made of virgin High Density Polyethylene, excellent impact strength and low temperature resistance (approx. up to -20℃).
- UV radiation resistant and weather-proof, acid, alkali, and chemically resistant, non-corroding.

Durable properties :

- Particular structure design, long use life.
- No repair necessarily, reduced disposal cost.

Outstanding performance :

- No nails, splinters and sharp edges, reduced load damage and workers injury.
- Possessing anti-slipped pads device, conform to safety and nonskid requirement.
- The stackable and nestable design reduces warehouse and shipping costs.
- Easy to keep clean, do not attract bacteria, insects and termites resistant, good hygienic.
- Many types and specifications and low selling price available could compete with wooden pallets.

Satisfy the pallet tests according to CNS & JIS standards :

- Completely satisfy the requirements of the pallet test results according to CNS & JIS national standards, including CNS 8170, 13018, or JIS Z 0602, Z 0606 and so on.
- We also accept customers' special demands to test.

Excellent environmental protection property :

- 100% recycled available; conform to the new generation environmental protection claim.
- Permitted to use the green mark on our plastic pallet approved by the MOENV since May, 2019.
- Conform to the restriction on heavy metal content of 94 / 62 / EC.
- Without using of certain environment-related substances restricted within the technical standard of EU's RoHS.
- Nan Ya plastic pallet,composed of 100% recycled PP(so called FP in this catalogue),was approved by Environmental Protection Administration of Taiwan with "Green Mark"in July,2022(Certificate No. 20185).

塑膠棧板功能測試項目・TEST ITEMS FOR PLASTIC PALLET

1.彎曲試驗
Bending Test

2.腳部壓縮試驗
Compression Test of Pallet Feet Part

3.墜落試驗
Corner Drop Test

4.下面板彎曲試驗
Bending Test of Under Surface Desk Board of Pallet

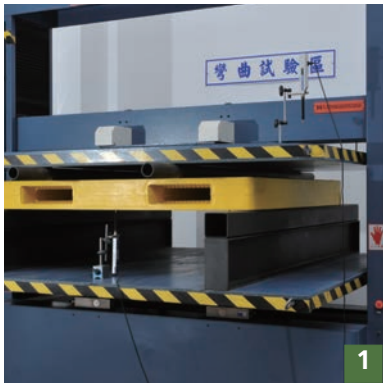

1

2

4

3

塑膠棧板物性標準表・PHYSICAL PROPERTY STANDARDS OF PLASTIC PALLET

項次 No.	試驗項目 Test Items	試驗方法 Test Method	試驗管制值 Quality Requirement Criteria
1	抗彎強度試驗(架荷重) Bending Test	CNS 8170	撓曲率(變形量mm/跨距mm)1.5%以下(A種)或5%以下(B種) Deflection rate：less than 1.5% (Class A) or 5% (Class B) of bending test length 殘餘撓曲率：0.5%以下 Residual deflection rate：less than 0.5% of bending test length
2	腳部壓縮試驗(靜荷重) Compression Test of Pallet Feet Part		變形量：4mm以內 Strain quantity： 4mm or less
3	墜落試驗 Corner Drop Test		不破裂 No break or crack
4	下面板彎曲試驗 Bending Test of Under Surface Desk Board of Pallet		撓曲率(變形量mm/單一插口寬mm)2.5%以下(A種)或8%以下(B種) Deflection rate(Deformation mm/ Width of a single entry mm)：less than 2.5% (Class A) or 8%(Class B) of bending test length

註：CNS 8170與 CNS13018測試方式，標準及項目與JIS Z 0602，JIS Z 0606類似
Note：Test items, methods, and criteria of CNS 8170, CNS 13018 is similar to JIS Z 0602, Z 0606.

· D型 / DJ型 / DC型 / DCJ型

結構堅實，特別適合自動倉庫及重載荷重狀況下使用；僅可以堆高機作業，不適用於托板車之使用。

· D Type/ DJ Type/ DC Type/ DCJ Type

Reinforced rackable structure, especially suitable for automatic warehousing and heavy-duty conditions, only fit for forklift; handlifter or power stacker not allowed.

D型
D TYPE

DJ型
DJ TYPE

DC型
DC TYPE

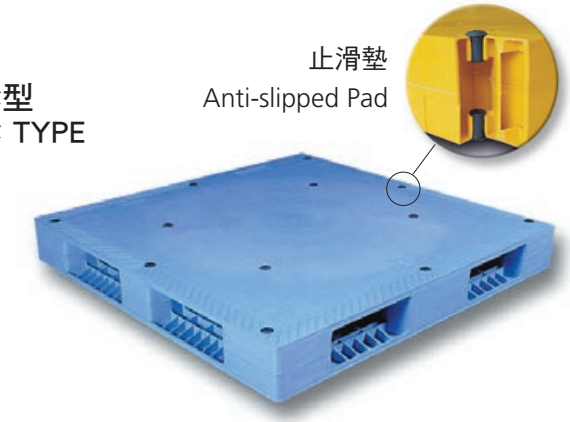

DCJ型
DCJ TYPE

D-090135-136

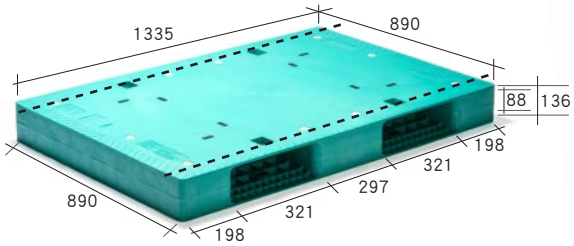

D-100130-150

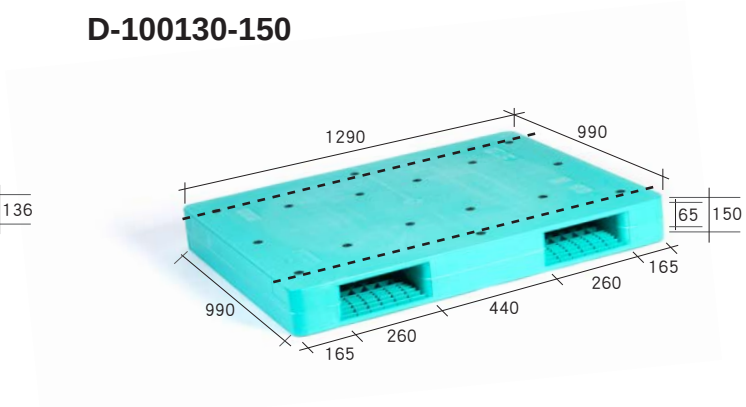

D-110110-150

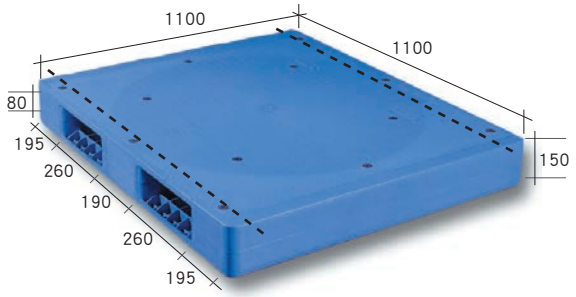

D-110140-130

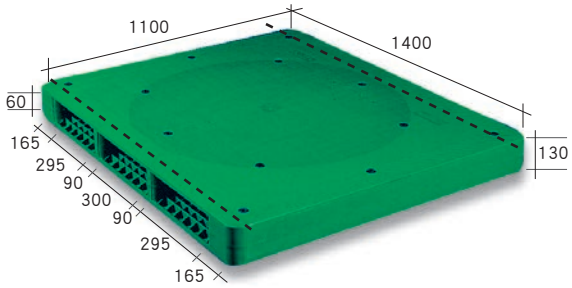

D-115135-160

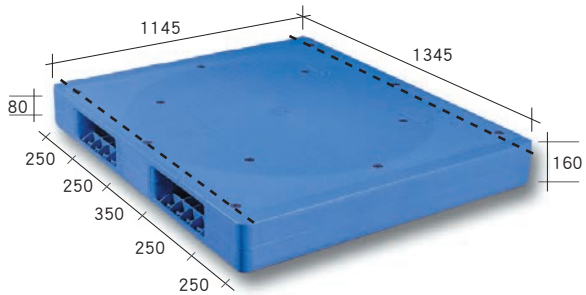

D-120120-145

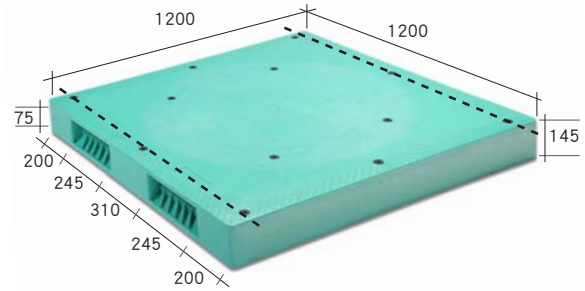

D-120140-130

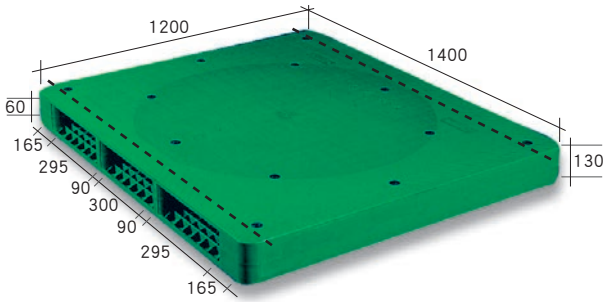

D-130150-140

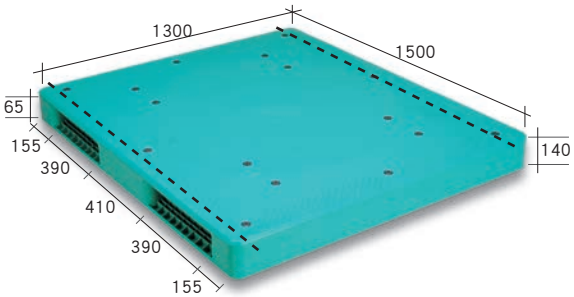

• 虛線為架荷重物測時支撐架排放位置。

D-140140-135

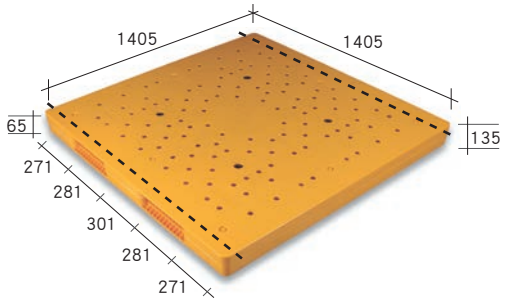

D-140120-160

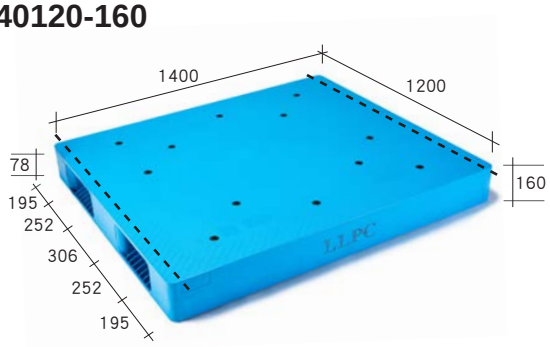

D-141141-145

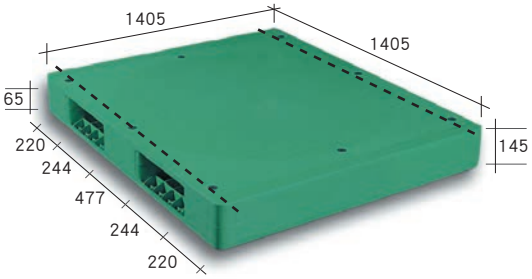

D-145130-160

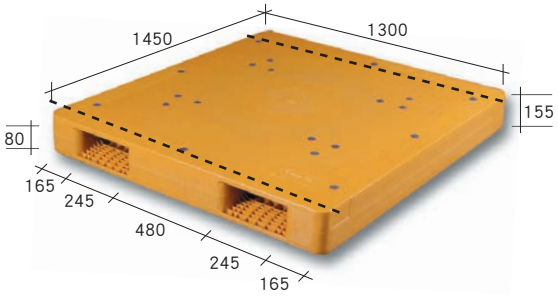

D-150150-180

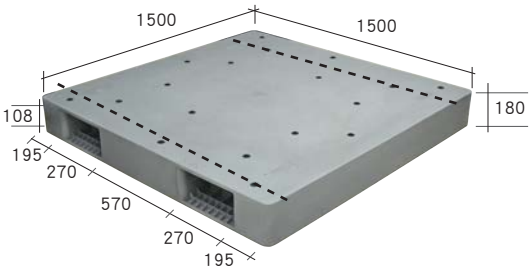

DJ-145120-150

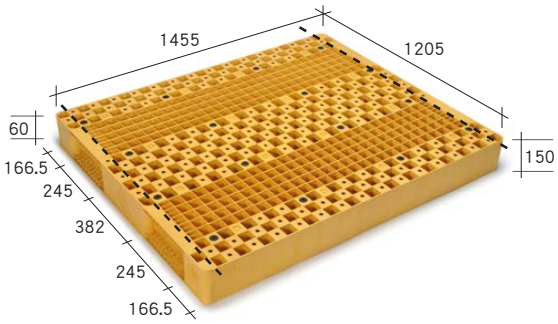

DC-110110-150-2

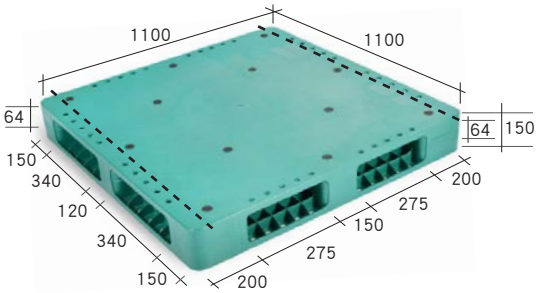

DC-110110-150-3

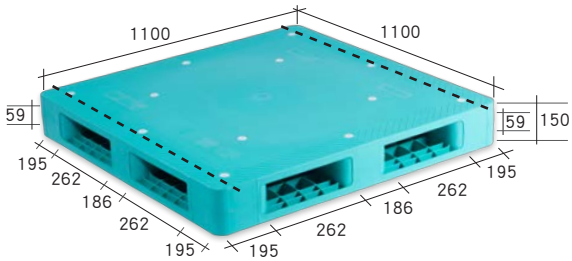

• 虛線為架荷重物測時支撐架排放位置。

DC-115115-150

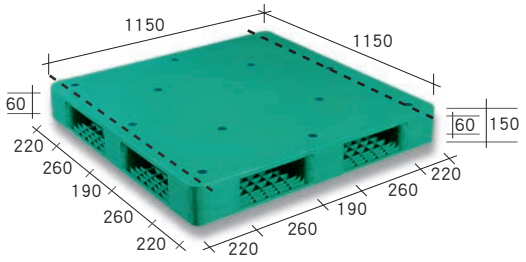

DC-120100-150

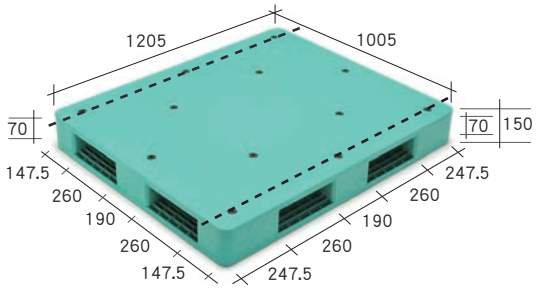

DC-120120-145

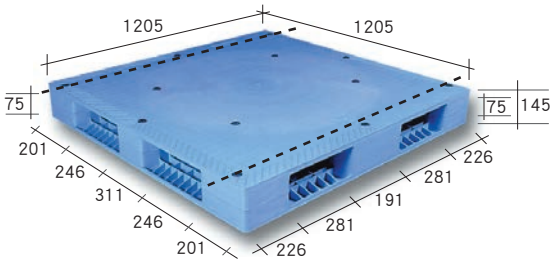

DC-130130-150

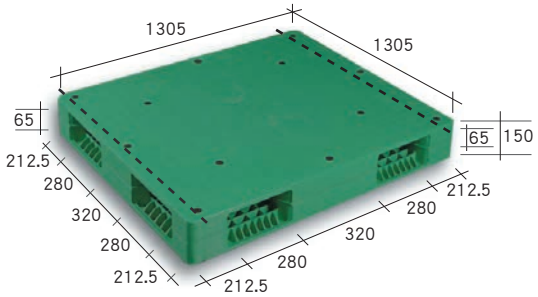

DC-130130-150-2

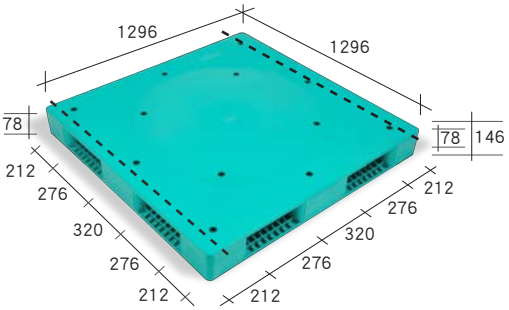

DC-132110-140

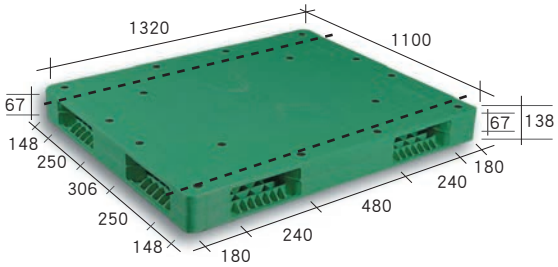

DCJ-120100-150

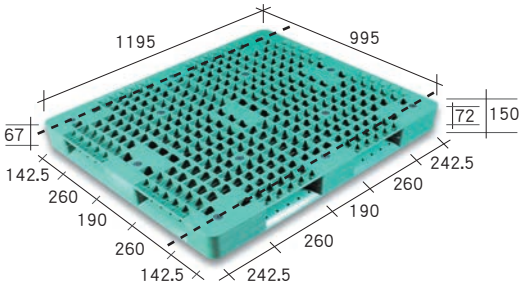

DCJ-120100-160

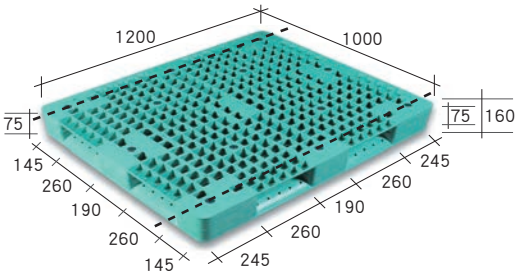

• 虛線為架荷重物測時支撐架排放位置。

型號 Model No.	尺寸 Size (mm)			承載面 Loading Side	插口數 Entry Gap		荷重(噸) Loading Capacity (Ton)				輸送帶使用 Conveyor Transiting	托板車使用 Adaptability Transiting	
	長 Length	寬 Width	高 Height	雙面 Double	2向 2 Way	4向 4 Way	靜荷重 Static	動荷重 Dynamic	架荷重 Racking A	架荷重 Racking B		2向 2 Way	4向 4 Way
D-090135-136	890	1335	136	○	○		3.5	0.8	2.0	3.5	○	○	
D-100130-150	990	1290	150	○	○		6.0	3.8	3.0	7.0	○		
D-110110-150	1100	1100	150	○	○		8.6	5.2	1.7	3.4	○		
D-110140-130	1100	1400	130	○	○		7.2	4.5	1.2	2.4	○		
D-115135-160	1145	1345	160	○	○		8.6	4.2	2.5	5.0	○		
D-120120-145	1200	1200	145	○	○		7.2	4.0	1.2	2.6	○		
D-120140-130	1200	1400	130	○	○		8.4	3.2	1.4	3.0	○		
D-130150-140	1300	1500	140	○	○		8.0	3.3	1.5	3.5	○		
D-140140-135	1405	1405	135	○	○		4.8	2.6	0.8	1.8	○		
D-140120-160	1400	1200	160	○	○		7.5	5.0	1.4	3.2	○		
D-141141-145	1405	1405	145	○	○		8.6	4.5	1.6	3.5	○		
D-145130-160	1450	1300	155	○	○		11.0	6.5	2.8	6.0	○		
D-150150-180	1500	1500	180	○	○		7.0	3.0	2.0	3.0	○		
DJ-145120-150	1455	1205	150	○	○		4.8	1.3	0.8	1.6	○		
DC-110110-150-2	1100	1100	150	○		○	6.0	3.0	0.95	1.8	○		
DC-110110-150-3	1100	1100	150	○		○	6.0	4.3	1.25	2.5	○		
DC-115115-150	1150	1150	150	○		○	6.0	4.0	1.1	2.5	○		
DC-120100-150	1205	1005	150	○		○	6.0	3.2	0.8	1.4	○		
DC-120120-145	1205	1205	145	○		○	5.5	3.7	0.8	1.8	○		
DC-130130-150	1305	1305	150	○		○	6.0	5.0	1.4	2.5	○		
DC-130130-150-2	1296	1296	146	○		○	3.0	2.5	0.5	1.0	○		
DC-132110-140	1320	1100	138	○		○	5.4	3.6	0.9	2.0	○		
DCJ-120100-150	1200	1000	150	○		○	3.5	2.8	0.6	1.2	○		
DCJ-120100-160	1200	1000	160	○		○	3.6	1.8	0.7	1.4	○		

註：1. 荷重欄位係以PP耐衝擊材質所製作棧板之測試數據，而架荷重係棧板長邊所能承重。
2. 荷重欄位皆僅供參考，並視實際使用情況而有所不同，亦不做任何商業證明使用。
3. 尺寸欄位為參考值，實際尺寸以棧板實物為準。
4. DC、DCJ之架荷重、動荷重係以圖示擺放方式所能承重。
5. 上表打"○"記號表示適用。

Note: 1.The data of Loading Capacity is based on the test of the pallet made of the impact PP material, and the racking load stands for the capacity of the pallet length direction.
2.The data of Loading Capacity is for reference only and is subject to the actual using condition, also not served as any commercial certification.
3.The data of Size is for reference only and the actual size is subject to the actual pallets.
4.The data of racking & dynamic loads of model DC & DCJ can be loaded under the pictures shown in the previous pages.
5.The "○" mark of table indicates "applicable to" .

南亞塑膠棧板之種類 · SPECIES OF NAN YA PLASTIC PALLET

· SC型 / SCJ型 / SJ型

可供輕載自動倉庫、一般現場運轉、出貨裝載及參鏈式輸送機等狀況下使用；堆高機及托板車皆可作業。

· SC Type/ SCJ Type/ SJ Type

Suitable for light-duty automatic ware- housing, in-plant transport, cargo carrying and three chain conveyor conditions, fit for forklift and trailer.

SC型
SC TYPE

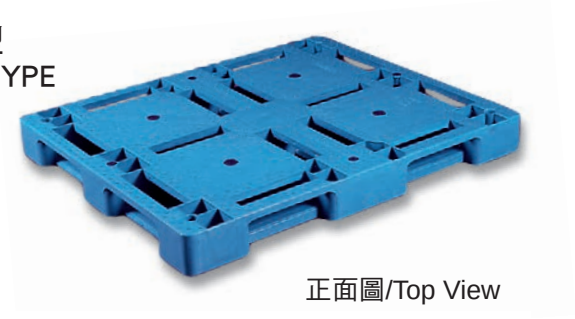

正面圖/Top View

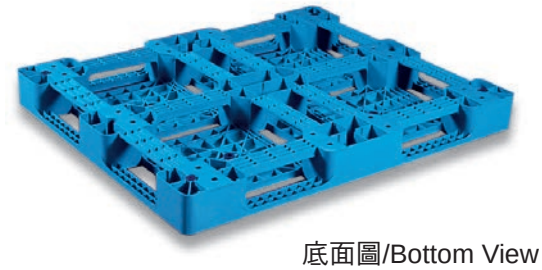

底面圖/Bottom View

SCJ型
SCJ TYPE

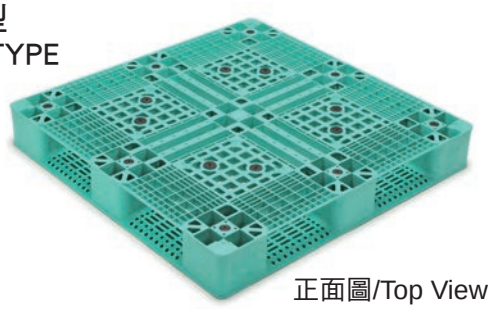

正面圖/Top View

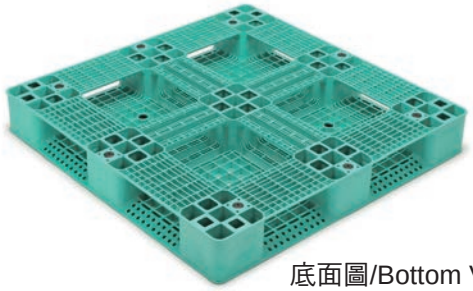

底面圖/Bottom View

SJ型
SJ TYPE

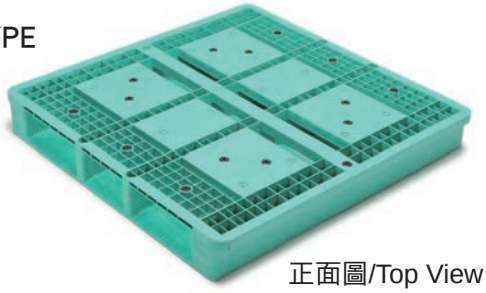

正面圖/Top View

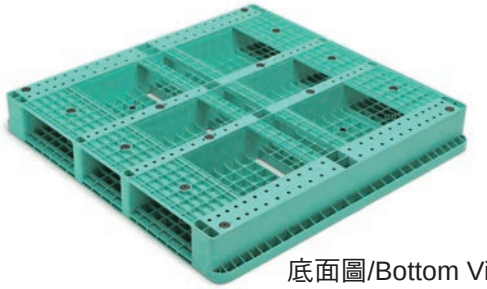

底面圖/Bottom View

SC-110110-140-2

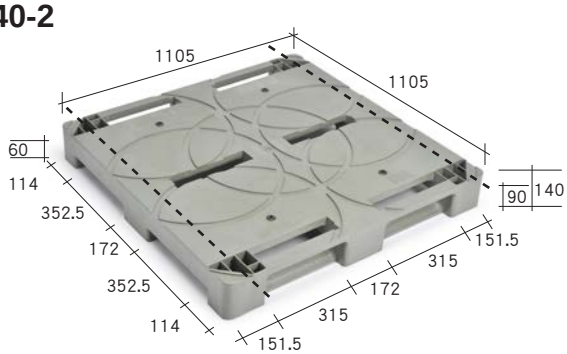

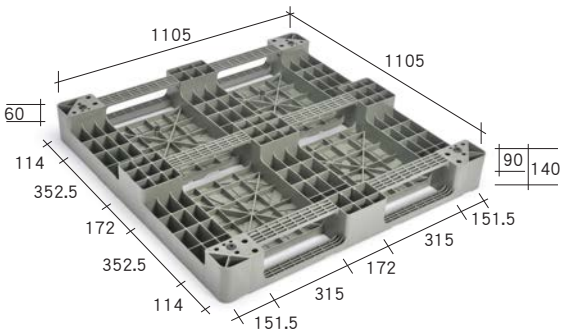

SC-110110-150-2

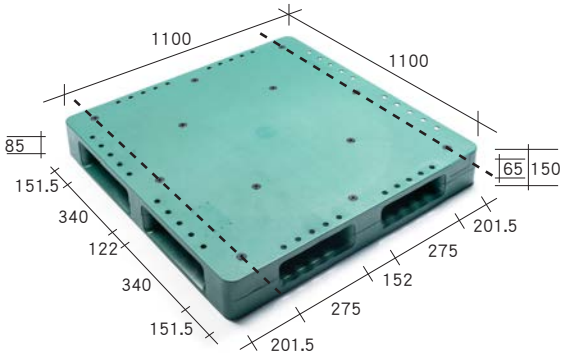

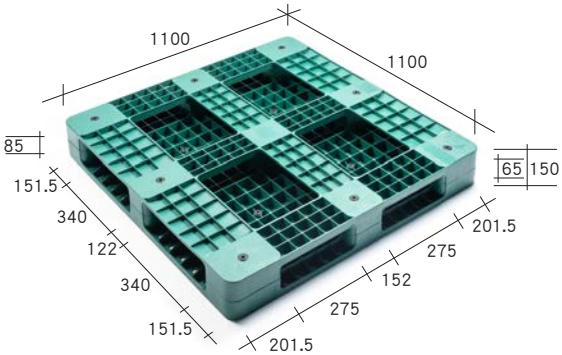

SC-120100-155

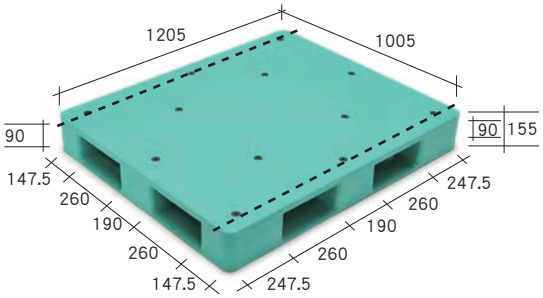

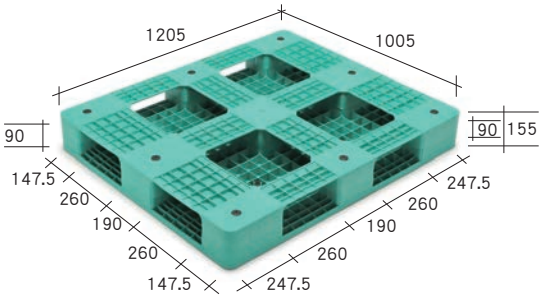

SC-131088-130

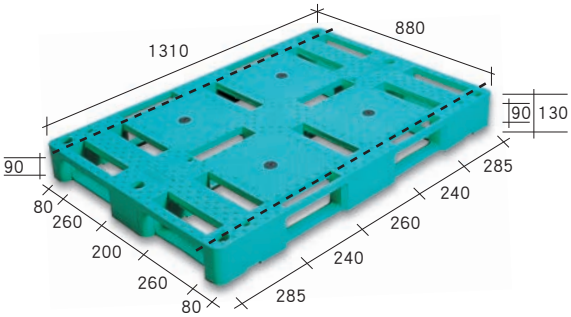

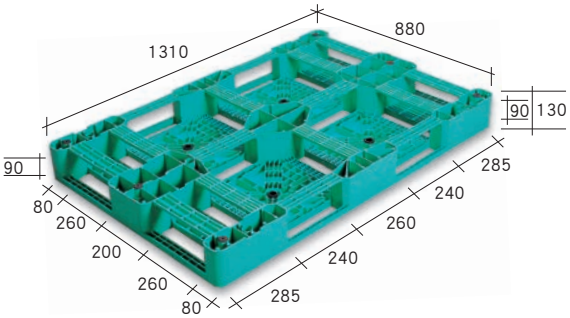

SC-132110-130

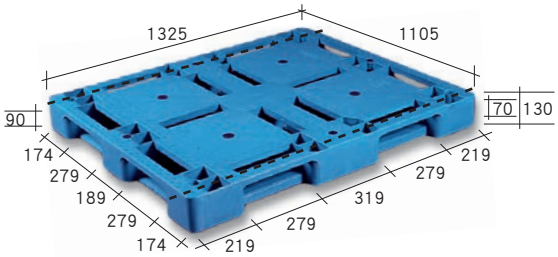

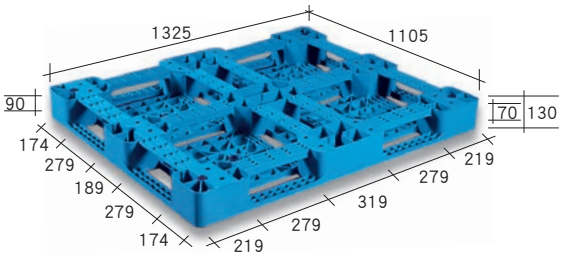

SC-132110-150

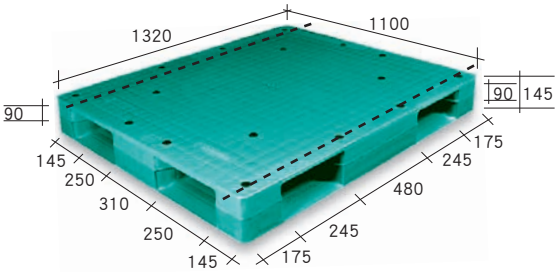

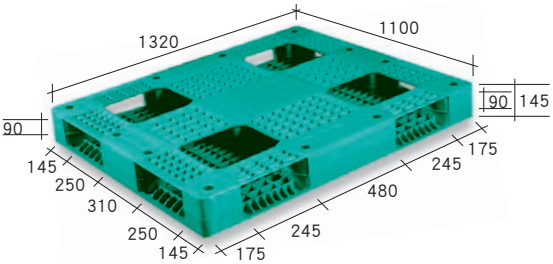

・虛線為架荷重物測時支撐架排放位置。

SC-138096-155

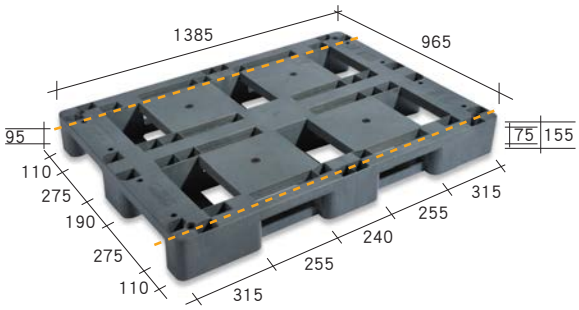

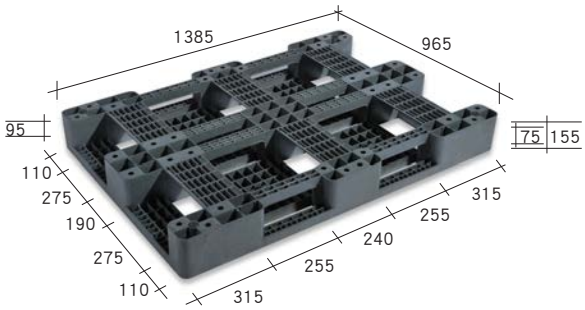

SCJ-100100-140

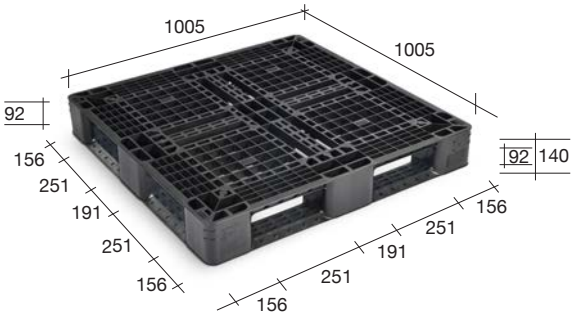

SCJ-105105-135

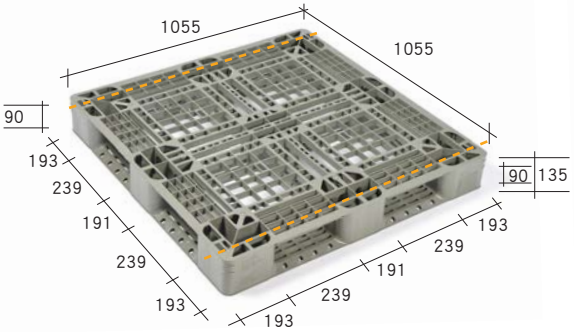

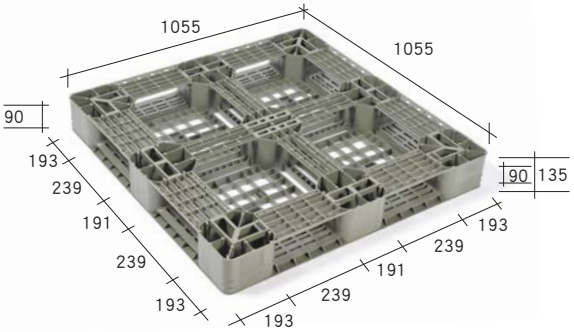

SCJ-110080-135

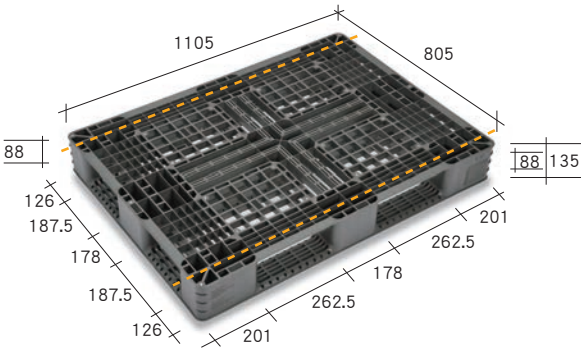

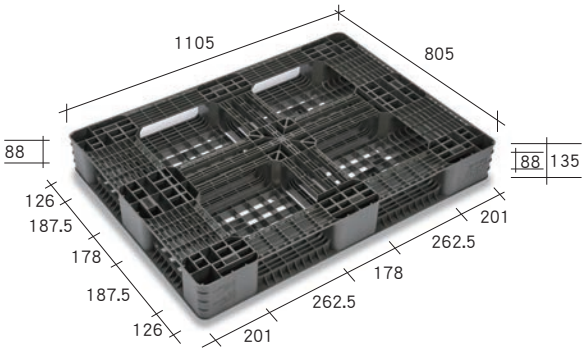

SCJ-110110-120

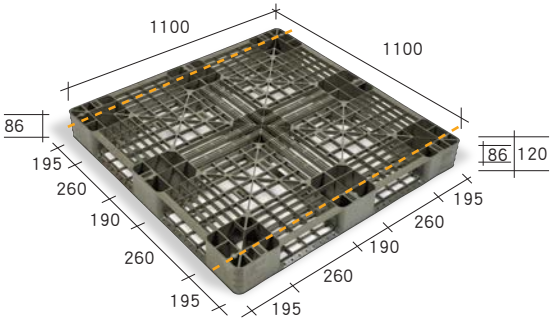

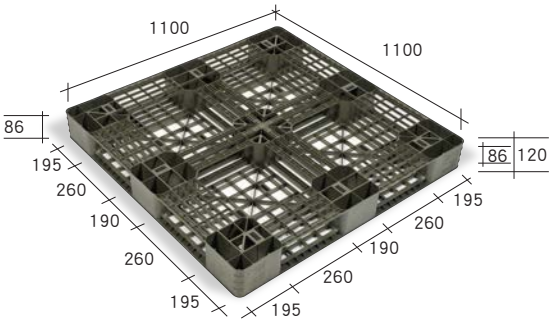

• 虛線為架荷重物測時支撐架排放位置。

SCJ-110110-140

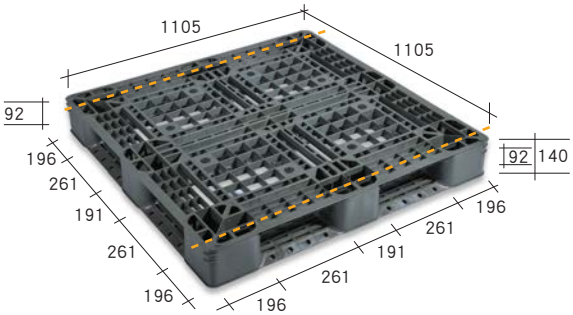

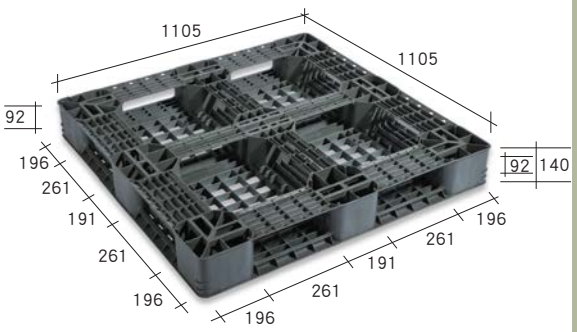

SCJ-110110-150

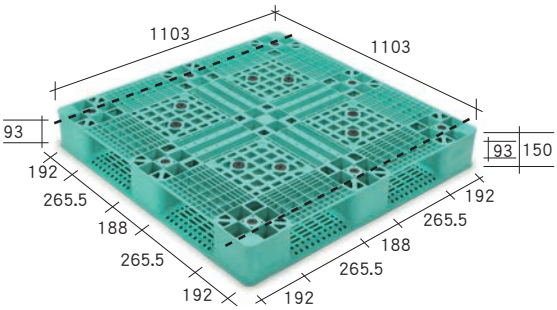

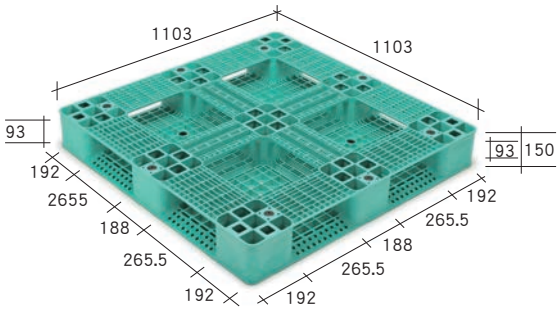

SCJ-114114-125

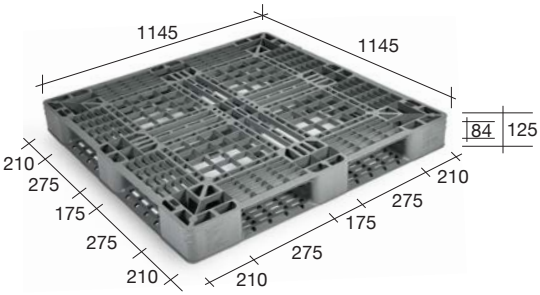

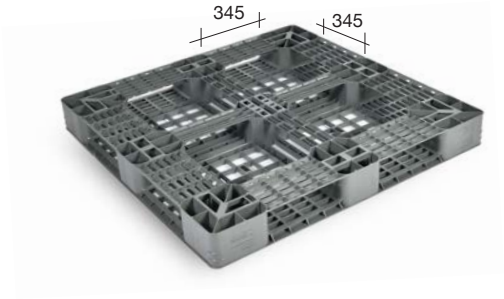

SCJ-120100-120

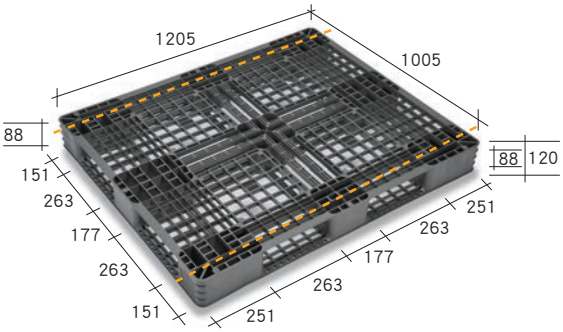

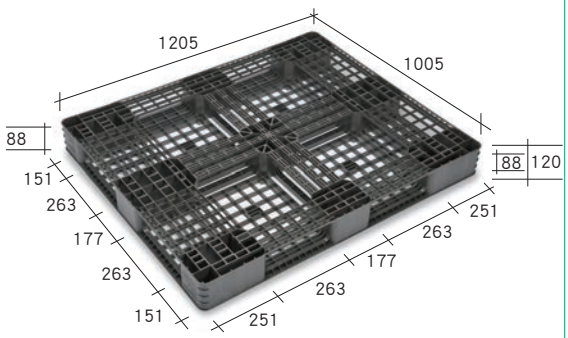

SCJ-120100-140

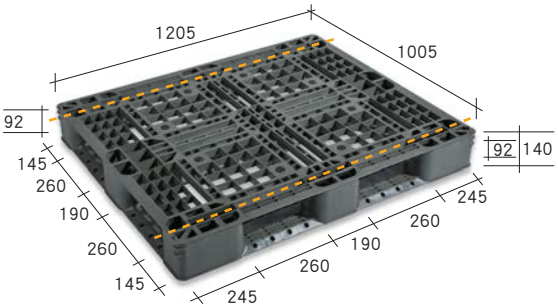

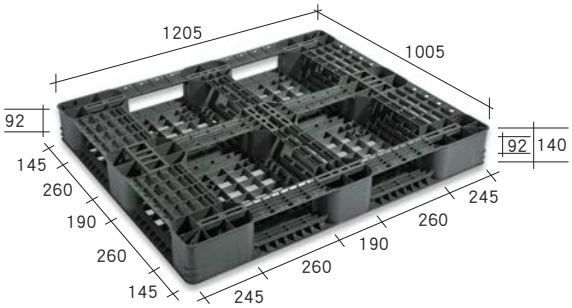

• 虛線為架荷重物測時支撐架排放位置。

SCJ-120100-145

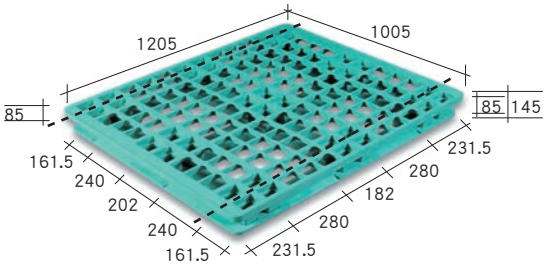

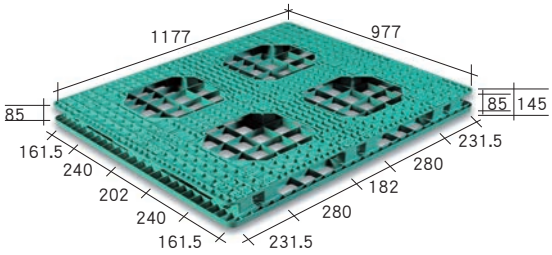

SCJ-120080-135

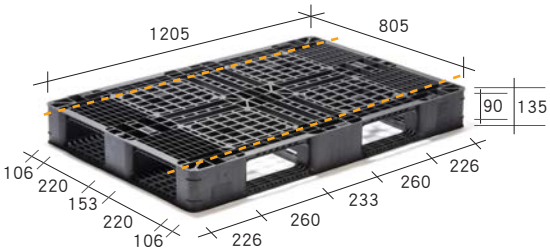

SCJ-120100-150

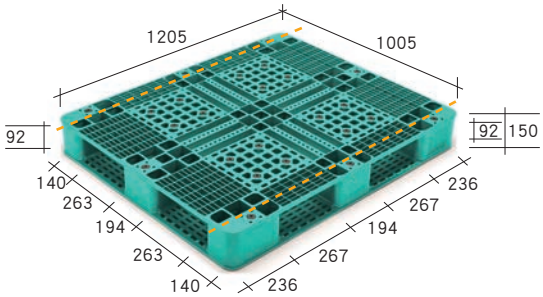

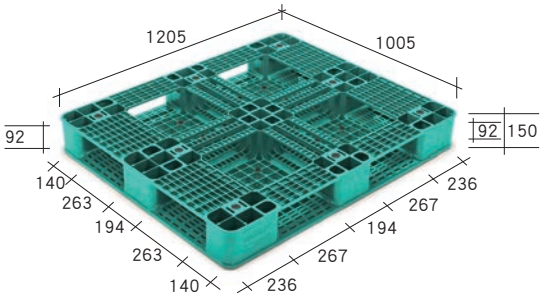

SCJ-120100-150-2

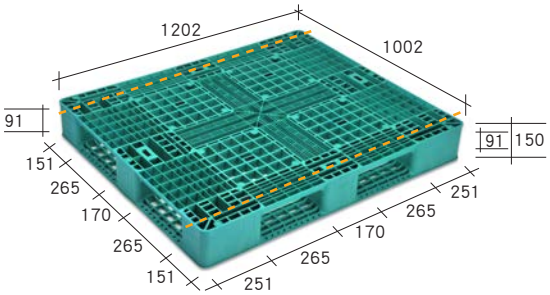

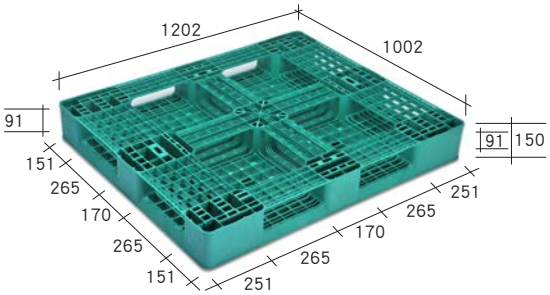

SCJ-120100-155

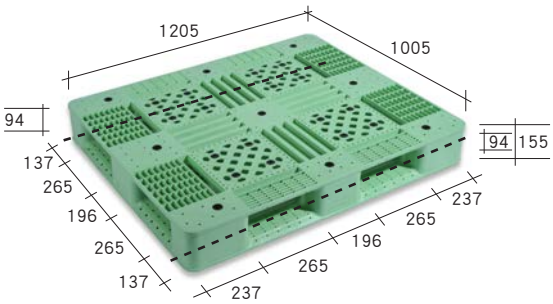

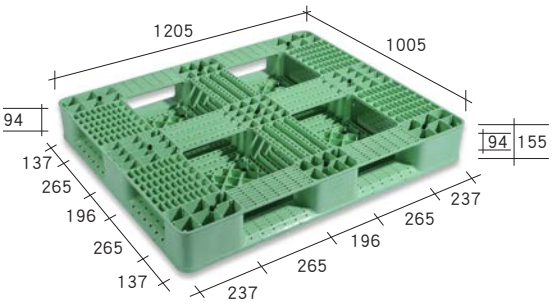

・虛線為架荷重物測時支撐架排放位置。

SCJ-120100-155-2

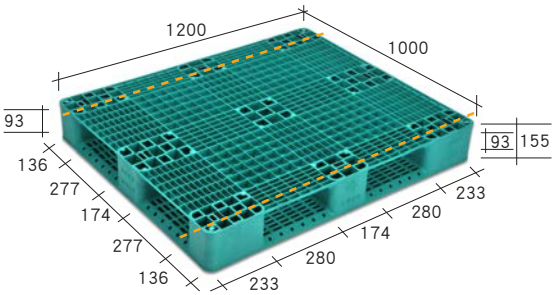

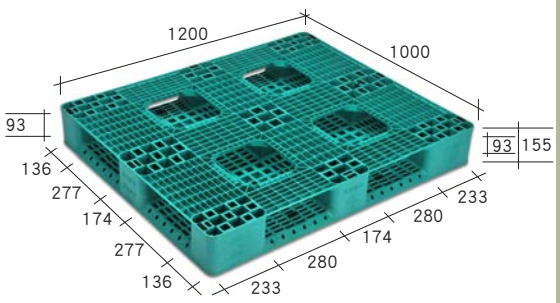

SCJ-130110-150

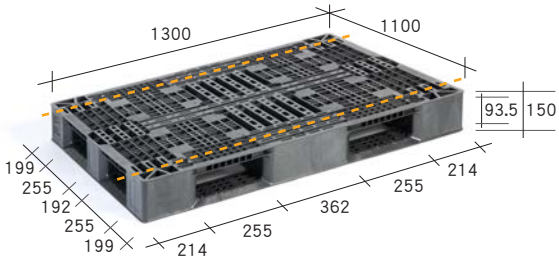

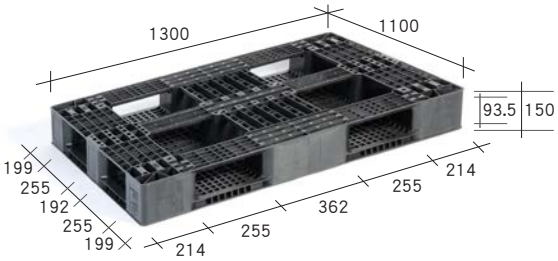

SCJ-132110-130

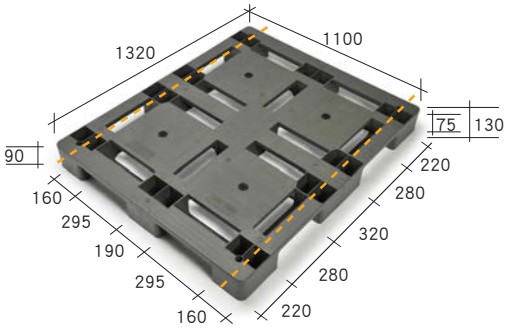

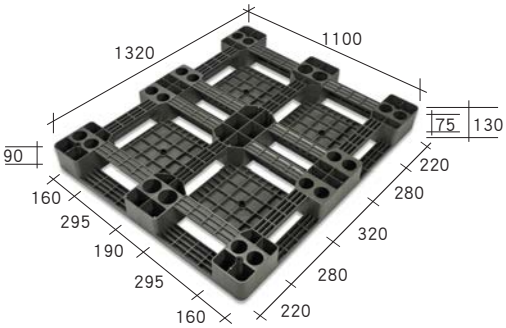

SJ-113113-150

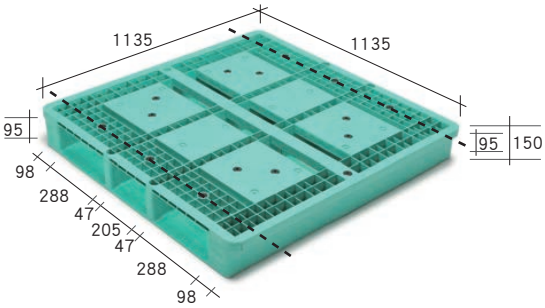

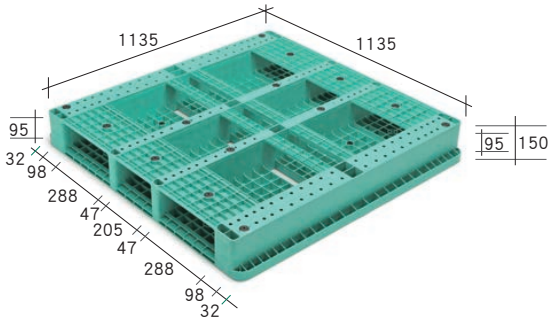

PBJ-120100-155

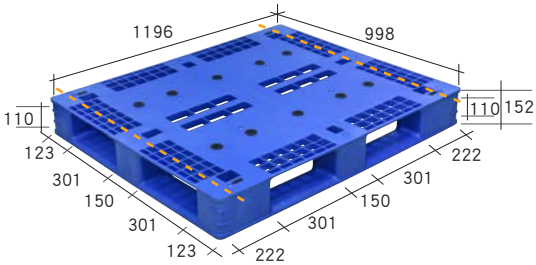

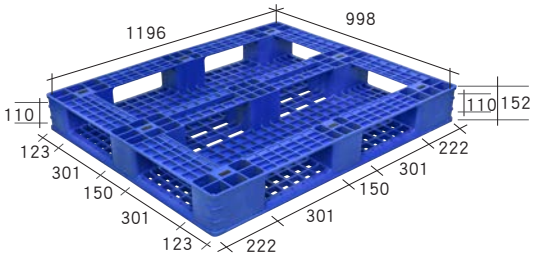

• 虛線為架荷重物測時支撐架排放位置。

型號 Model No.	尺寸 Size (mm)			承載面 Loading Side	插口數 Entry Gap		荷重(噸) Loading Capacity (Ton)				輸送帶使用 Conveyor Transiting	托板車使用 Adaptability Transiting	
	長 Length	寬 Width	高 Height	單面 Single	2向 2 Way	4向 4 Way	靜荷重 Static	動荷重 Dynamic	架荷重 Racking A	架荷重 Racking B		2向 2 Way	4向 4 Way
SC-110110-140-2	1105	1105	140	○		○	3.3	2.8	0.2	0.55	○	○	
SC-110110-150-2	1100	1100	150	○		○	6.0	2.8	0.95	1.8	○	○	
SC-120100-155	1205	1005	155	○		○	6.0	3.2	0.65	1.1	○		○
SC-131088-130	1310	880	130	○		○	2.8	2.2	0.4	0.7	○		○
SC-132110-130	1325	1105	130	○		○	4.2	3.0	0.25	0.4	○	○	
SC-132110-150	1320	1100	145	○		○	2.4	2.2	0.4	0.8	○		○
SC-138096-155	1385	965	155	○		○	4.5	3.0	0.4	0.8	○	○	
SCJ-100100-140	1005	1005	140	○		○	4.0	1.5	0.2	0.45	○		○
SCJ-105105-135	1055	1055	135	○		○	4.0	2.0	0.2	0.45	○		○
SCJ-110080-135	1105	805	135	○		○	2.5	2.2	0.2	0.5	○		○
SCJ-110110-120	1100	1100	120	○		○	1.5	1.2	0.1	0.17	○		○
SCJ-110110-140	1105	1105	140	○		○	4.5	2.5	0.2	0.45	○		○
SCJ-110110-150	1103	1103	150	○		○	4.0	3.2	0.5	1.0	○		○
SCJ-114114-125	1145	1145	125	○		○	2.5	0.9	0.15	0.25	○		○
SCJ-120080-135	1205	805	135	○		○	3.0	2.2	0.2	0.5	○		○
SCJ-120100-120	1205	1005	120	○		○	2.8	1.2	0.1	0.2	○		○
SCJ-120100-140	1205	1005	140	○		○	3.0	2.0	0.2	0.45	○		○
SCJ-120100-145	1205	1005	145	○		○	2.5	1.8	0.3	0.6	○		○
SCJ-120100-150	1205	1005	150	○		○	4.5	3.2	0.5	1.0	○		○
SCJ-120100-150-2	1202	1002	150	○		○	4.5	2.5	0.25	0.6	○		○
SCJ-120100-155	1205	1005	155	○		○	6.0	4.0	0.7	1.6	○		○
SCJ-120100-155-2	1200	1000	155	○		○	5.0	3.6	0.65	1.2	○		○
SCJ-130110-150	1300	1100	150	○		○	4.5	2.8	0.4	0.8	○		○
SCJ-132110-130	1320	1100	130	○		○	4.2	3.0	0.2	0.45	○	○	
SJ-113113-150	1135	1135	150	○	○		4.5	2.5	0.8	1.6	○	○	
PBJ-120100-155	1200	1000	155	○		○	3.0	1.2	0.5	0.75	○		○

註：1. 荷重欄位係以PP耐衝擊材質所製作棧板之測試數據，而架荷重係棧板寬邊所能承重。
2. 荷重欄位皆僅供參考，並視實際使用情況而有所不同，亦不做任何商業證明使用。
3. 尺寸欄位為參考值，實際尺寸以棧板實物為準。
4.上表打"○"記號表示適用。

Note：1.The data of Loading Capacity is based on the test of the pallet made of the impact PP material, and the racking load stands for the capacity of the pallet width direction.
2.The data of Loading Capacity is for reference only and is subject to the actual using condition, also not served as any commercial certification.
3.The data of Size is for reference only and the actual size is subject to the actual pallets.
4.The "○" mark of table indicates "applicable to" .

· F型 / FC型 / FCJ型

結構堅實，可供中載自動倉庫、一般現場運轉及出貨裝載等狀況下使用；堆高機及托板車皆可作業。

· F Type/ FC Type/ FCJ Type

Reinforced rackable structure, suitable for mid-duty automatic warehousing, in-plant transport, and cargo carrying conditions, fit for forklift and trailer.

F型
F TYPE

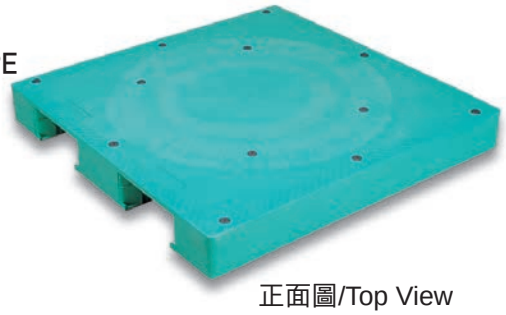

正面圖/Top View

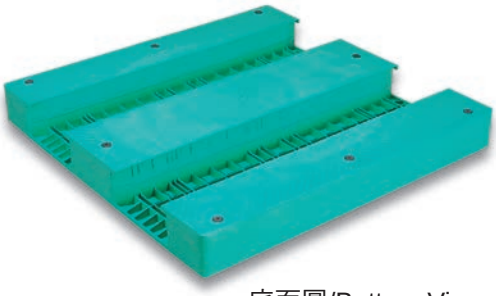

底面圖/Bottom View

FC型
FC TYPE

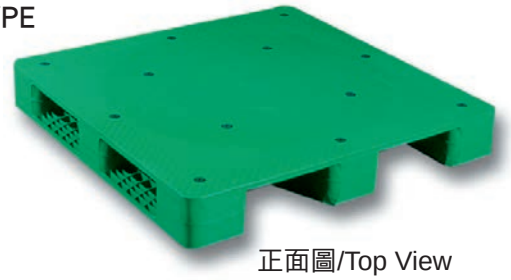

正面圖/Top View

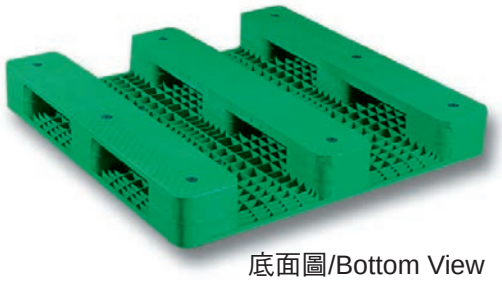

底面圖/Bottom View

FCJ型
FCJ TYPE

正面圖/Top View

底面圖/Bottom View

F-110110-150

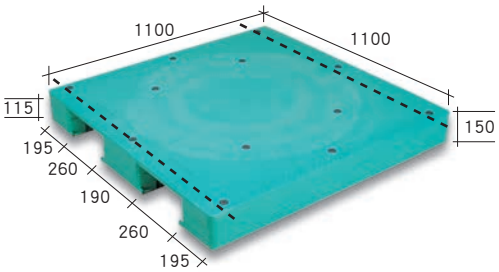

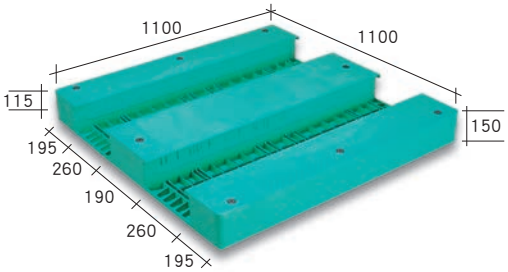

F-120120-145

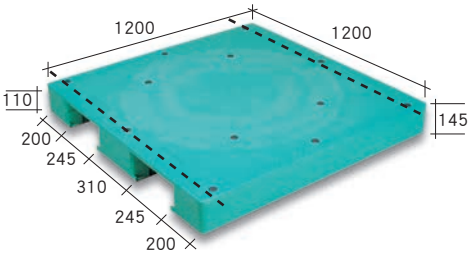

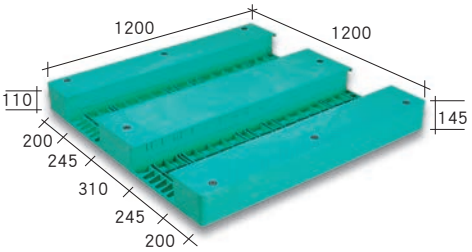

FC-100100-160

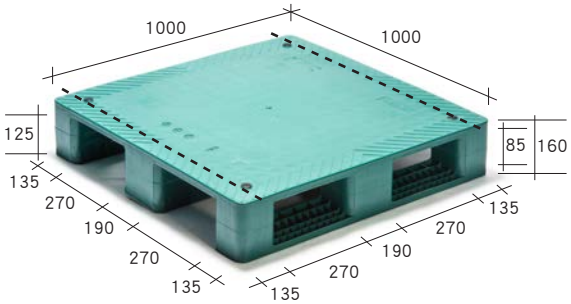

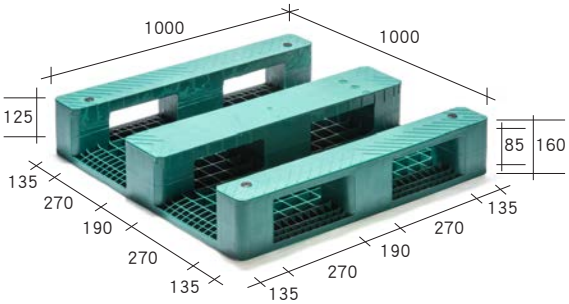

FC-110110-150-2

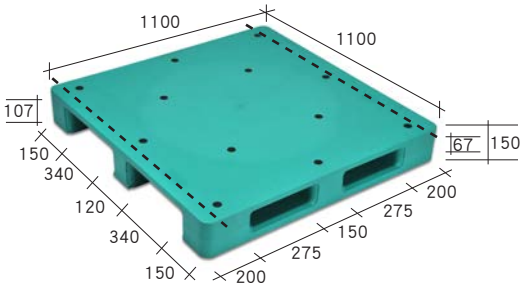

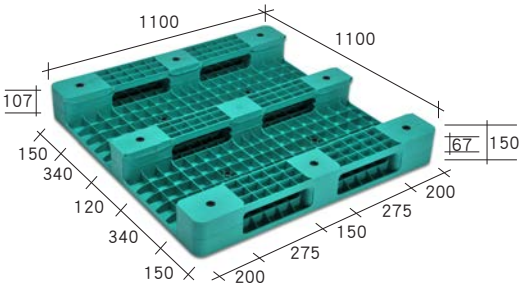

FC-110110-150-3

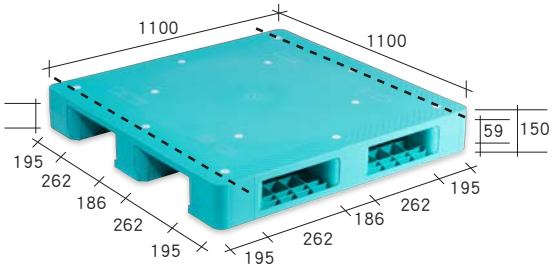

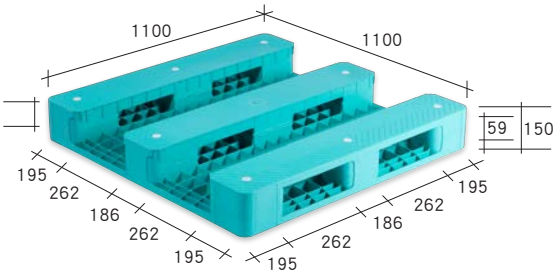

・虛線為架荷重物測時支撐架排放位置。

FC-115115-150

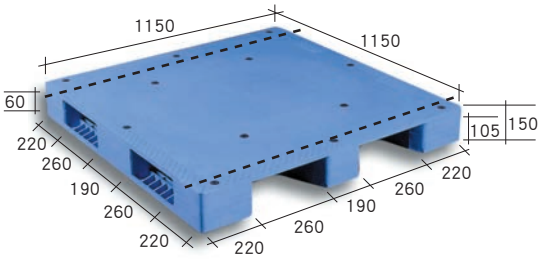

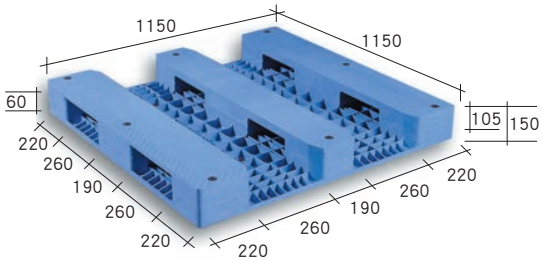

FC-120100-150

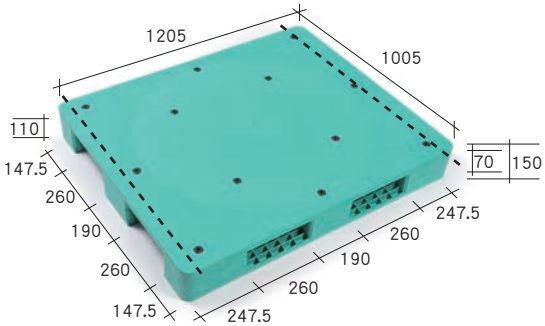

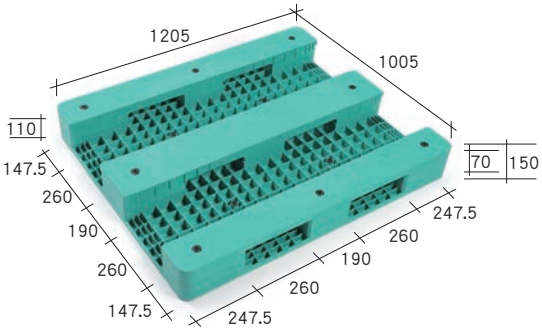

FC-120100-155

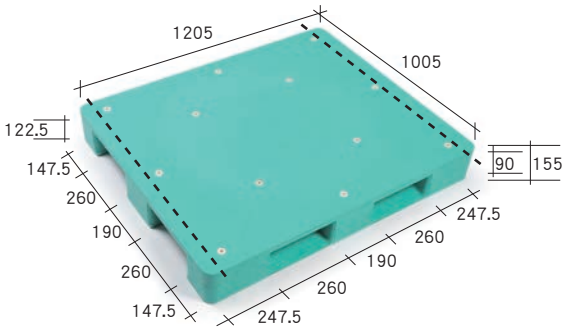

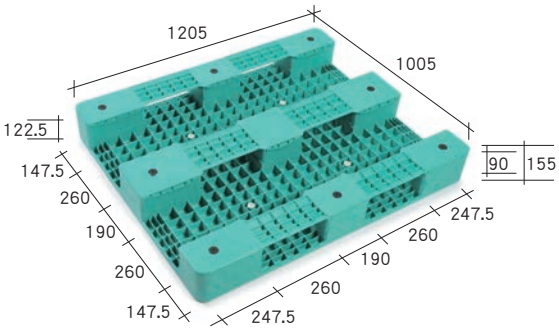

FC-120120-145

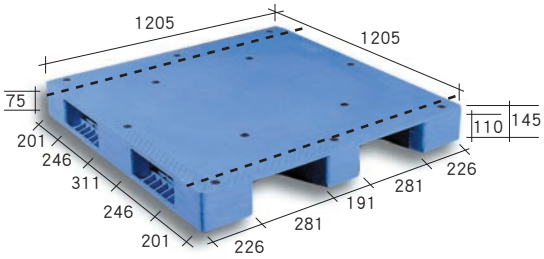

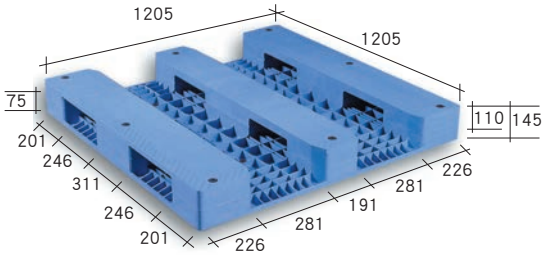

FC-127109-160-3

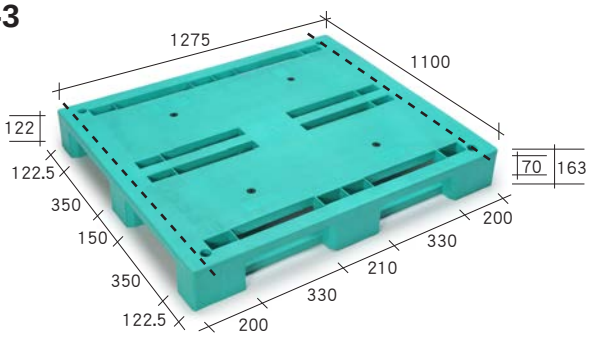

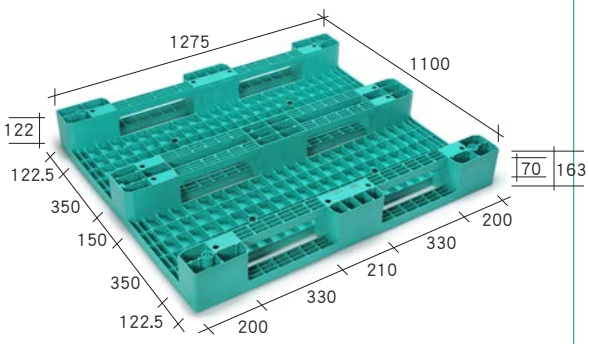

・虛線為架荷重物測時支撐架排放位置。

FC-130130-150

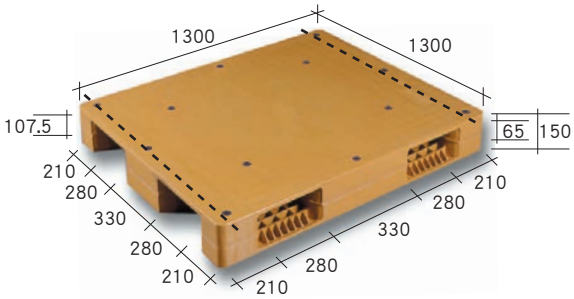

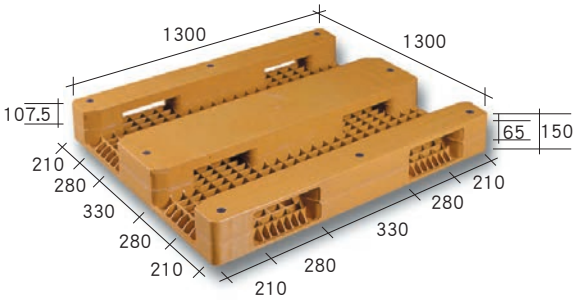

FC-130130-150-2

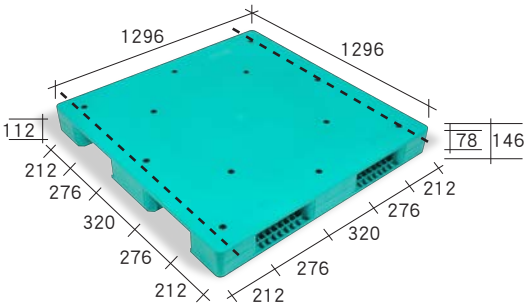

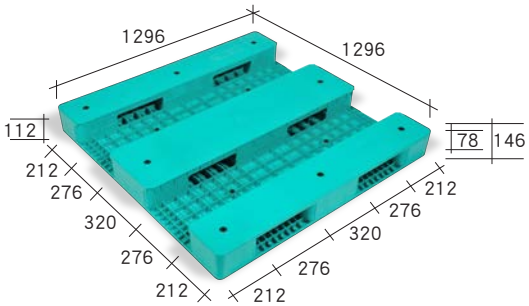

FC-132110-140

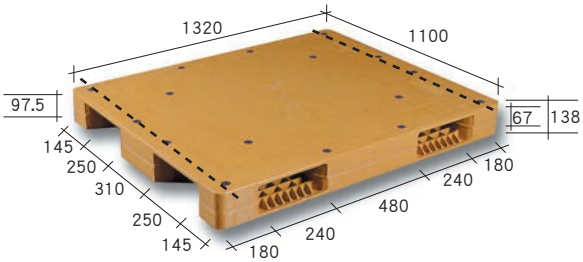

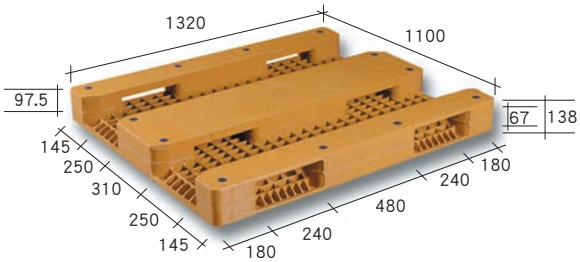

FCJ-110110-140

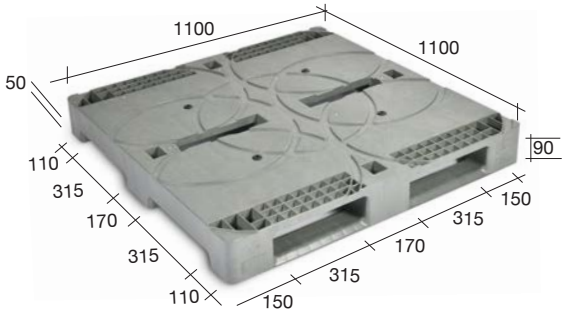

FCJ-110110-160

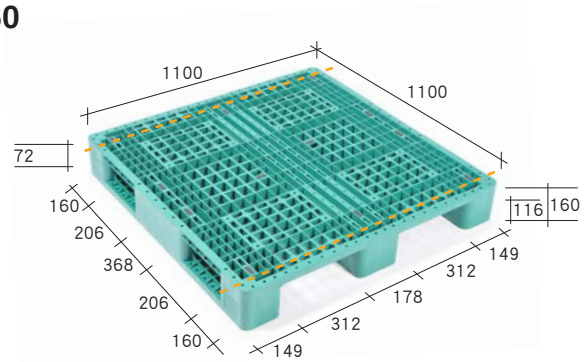

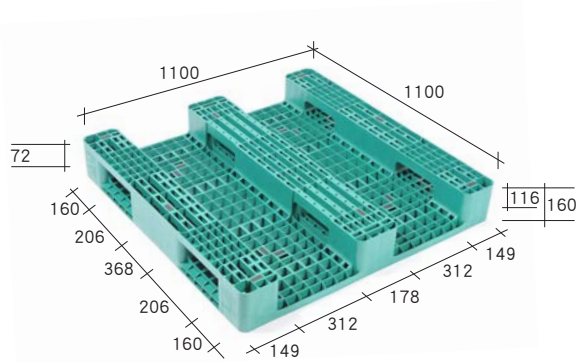

・虛線為架荷重物測時支撐架排放位置。

FC-127095-160

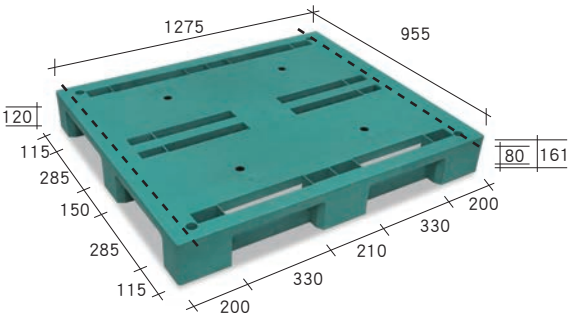

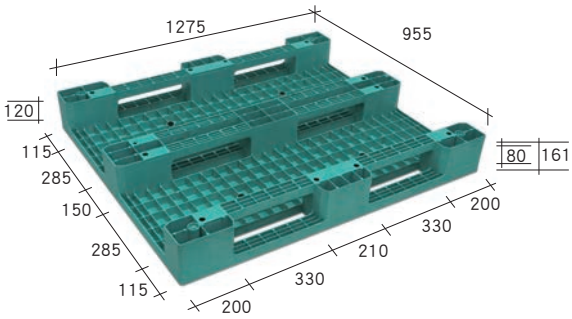

FCJ-120100-155

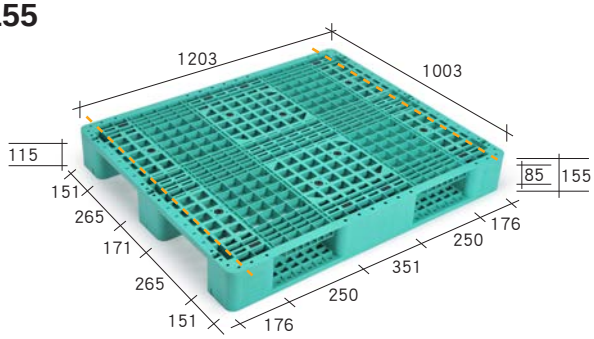

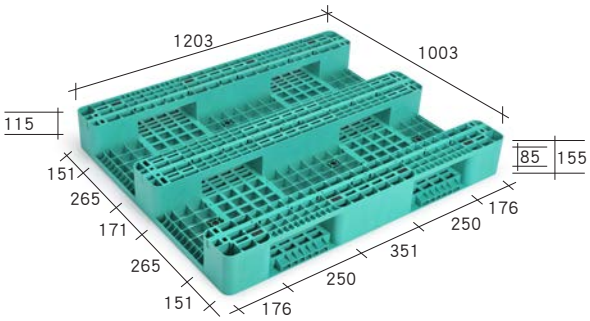

FCJ-120100-157

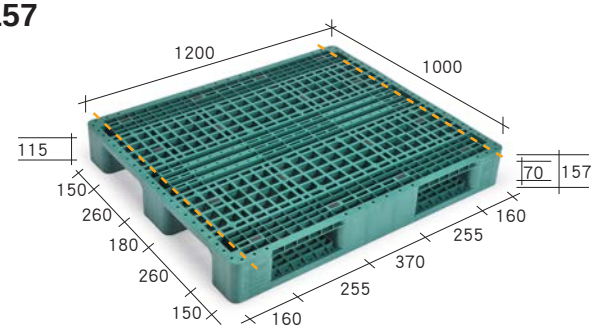

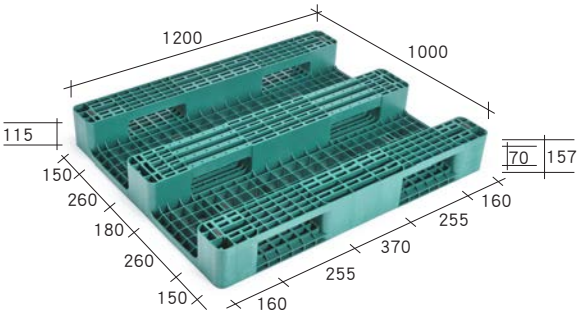

FCJ-120100-160

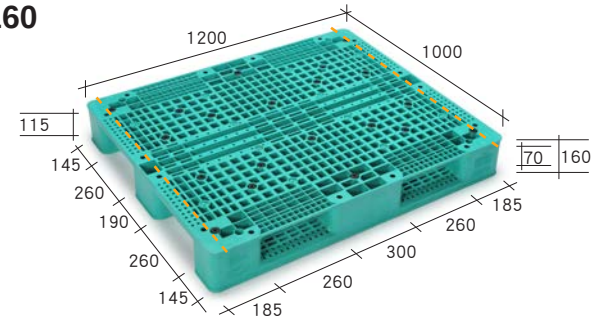

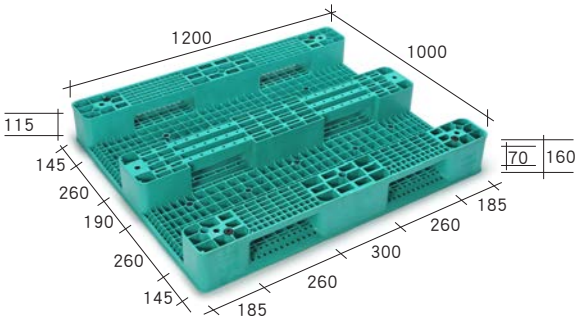

FCJ-127095-160

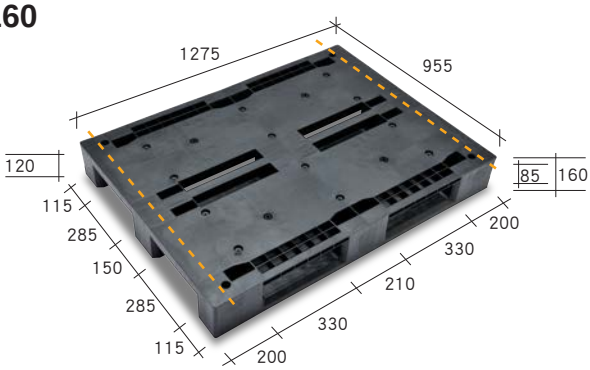

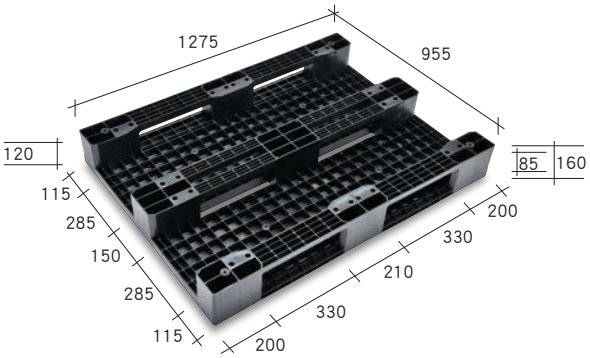

・虛線為架荷重物測時支撐架排放位置。

FCJ-127105-160

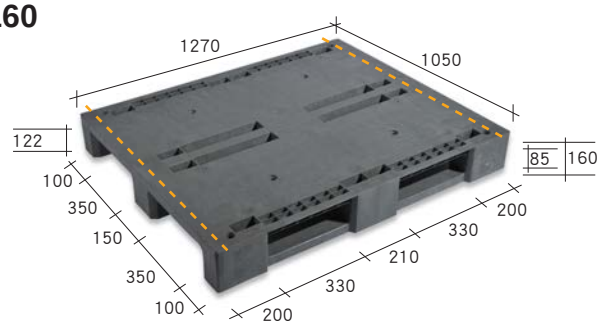

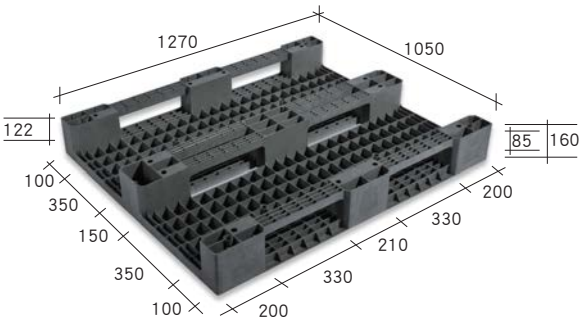

FCJ-127110-160

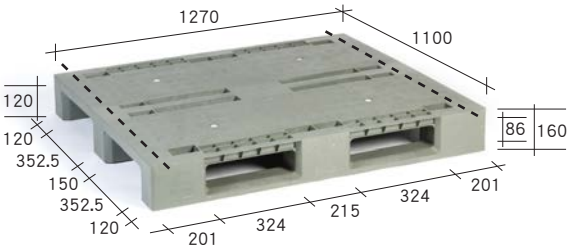

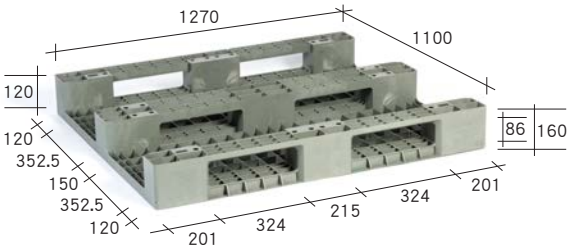

• 虛線為架荷重物測時支撐架排放位置。

型號 Model No.	尺寸 Size (mm)			承載面 Loading Side	插口數 Entry Gap		荷重(噸) Loading Capacity (Ton)				輸送帶使用 Conveyor Transiting	托板車使用 Adaptability Transiting	
	長 Length	寬 Width	高 Height	單面 Single	2向 2 Way	4向 4 Way	靜荷重 Static	動荷重 Dynamic	架荷重 Racking A	架荷重 Racking B		2向 2 Way	4向 4 Way
F-110110-150	1100	1100	150	○	○		5.4	3.5	0.9	1.8	○	○	
F-120120-145	1200	1200	145	○	○		4.5	3.3	0.9	1.8	○	○	
FC-100100-160	1000	1000	160	○		○	4.5	3.8	1.0	1.8	○	○	
FC-110110-150-2	1100	1100	150	○		○	5.0	2.8	0.8	1.5	○	○	
FC-110110-150-3	1100	1100	150	○		○	6.0	4.0	1.0	2.0	○	○	
FC-115115-150	1150	1150	150	○		○	6.0	3.8	1.0	2.0	○	○	
FC-120100-150	1205	1005	150	○		○	3.0	2.8	0.5	1.2	○	○	
FC-120100-155	1205	1005	155	○		○	2.4	2.0	0.4	0.8	○		○
FC-120120-145	1205	1205	145	○		○	4.5	3.3	0.8	1.6	○	○	
FC-127095-160	1275	955	161	○		○	4.2	2.8	0.5	1.0	○	○	
FC-127109-160-3	1275	1100	163	○		○	3.0	2.8	0.5	0.9	○	○	
FC-130130-150	1300	1300	150	○		○	6.0	3.5	1.0	2.0	○	○	
FC-130130-150-2	1296	1296	146	○		○	3.0	2.5	0.5	1.0	○	○	
FC-132110-140	1320	1100	138	○		○	3.6	2.6	0.6	1.4	○	○	
FCJ-110110-140	1100	1100	140	○		○	3.3	2.5	0.2	0.5	○	○	
FCJ-110110-160	1100	1100	160	○		○	4.5	3.5	1.0	2.2	○	○	
FCJ-120100-155	1203	1003	155	○		○	3.6	2.6	0.35	0.7	○	○	
FCJ-120100-157	1200	1000	157	○		○	4.8	4.0	0.8	1.8	○	○	
FCJ-120100-160	1200	1000	160	○		○	5.0	4.0	0.8	1.6	○	○	
FCJ-127095-160	1275	955	160	○		○	4.2	2.8	0.5	1.0	○	○	
FCJ-127105-160	1270	1050	160	○		○	3.0	2.5	0.5	0.9	○	○	
FCJ-127110-160	1270	1100	160	○		○	3.0	2.0	0.4	0.7	○	○	

註：1. 荷重欄位係以PP耐衝擊材質所製作棧板之測試數據，而架荷重係棧板有下面板側所能承重。
2. 荷重欄位皆僅供參考，並視實際使用情況而有所不同，亦不做任何商業證明使用。
3. 尺寸欄位為參考值，實際尺寸以棧板實物為準。
4.上表打"○"記號表示適用。

Note：1.The data of Loading Capacity is based on the test of the pallet made of the impact PP material, and the racking load stands for the capacity of the pallet on the direction with the bottom decks.
2.The data of Loading Capacity is for reference only and is subject to the actual using condition, also not served as any commercial certification.
3.The data of Size is for reference only and the actual size is subject to the actual pallets.
4.The "○" mark of table indicates "applicable to" .

南亞塑膠棧板之種類 · SPECIES OF NAN YA PLASTIC PALLET

· E型/ ECJ型/ EJ型

可供一般現場運轉及進出口貨物裝載使用，堆高機及托板車皆可作業。

· E Type / ECJ Type / EJ Type

Suitable for in-plant transport, domestic & export cargo carrying, fit for forklift and trailer.

E型 / EJ型
E / EJ TYPE

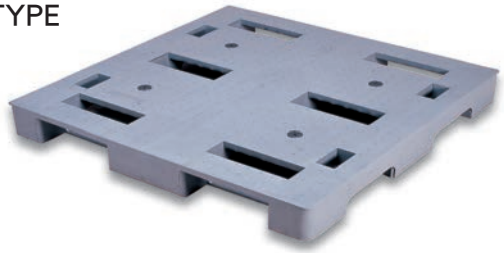

正面圖/Top View

底面圖/Bottom View

ECJ型
ECJ TYPE

正面圖/Top View

底面圖/Bottom View

E-110110-138

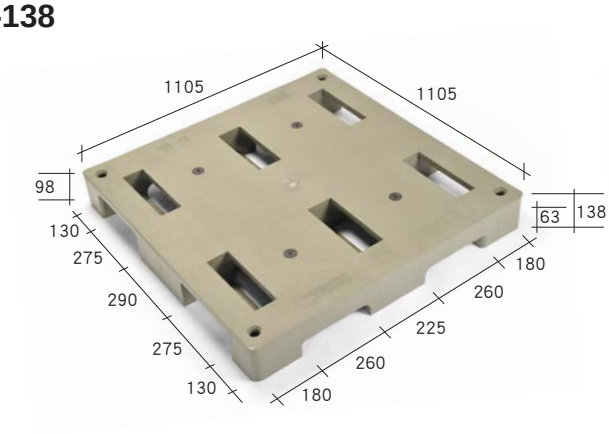

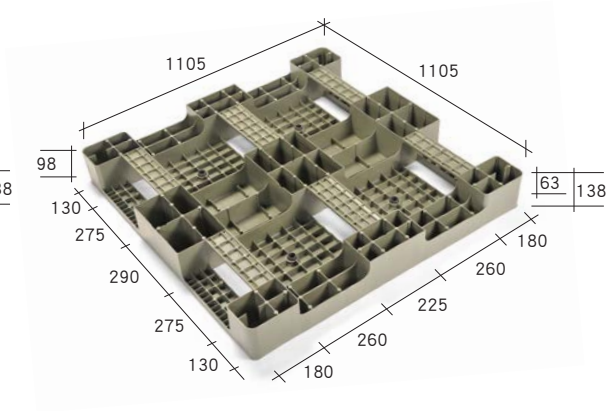

E-110110-140

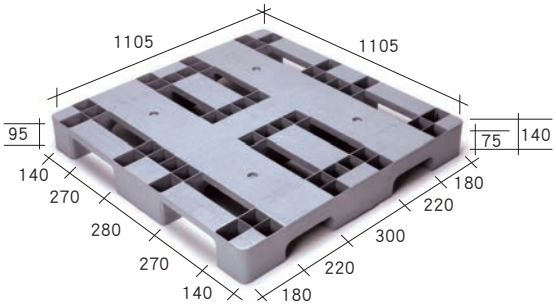

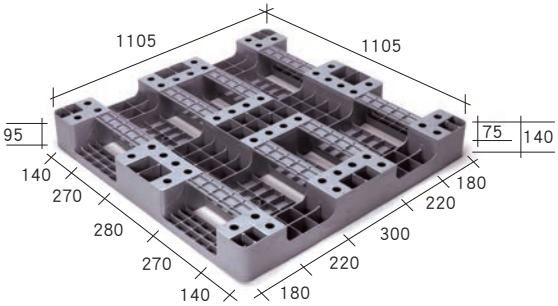

E-120100-136

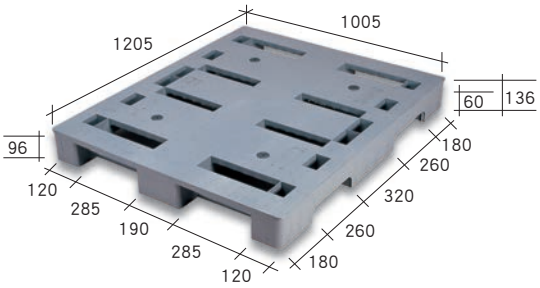

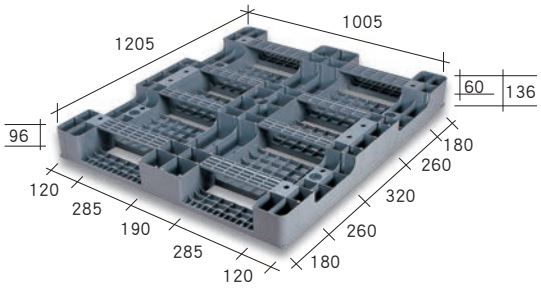

ECJ-100100-130

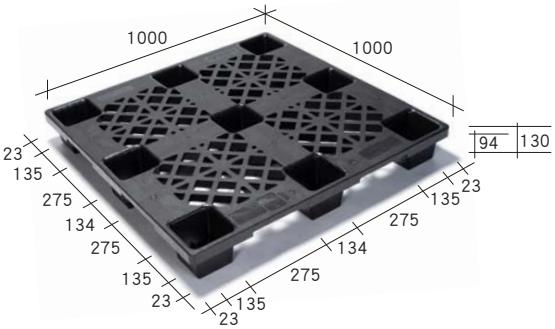

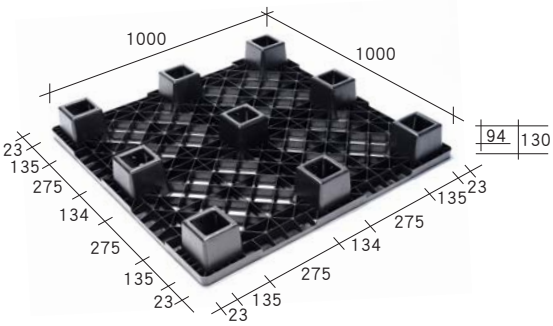

ECJ-060050-134 (可併接)

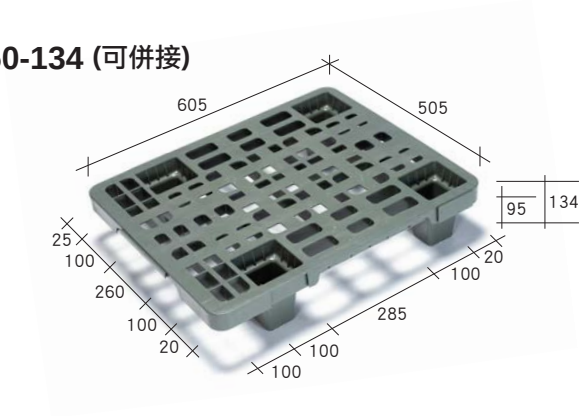

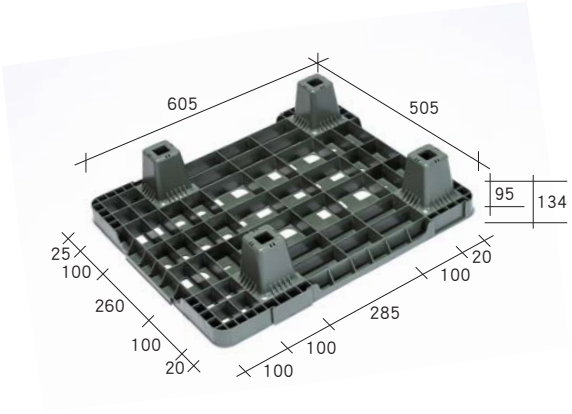

ECJ-110110-135

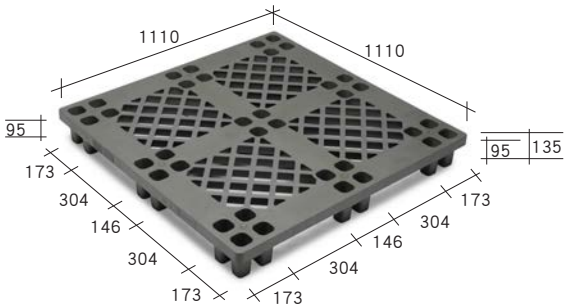

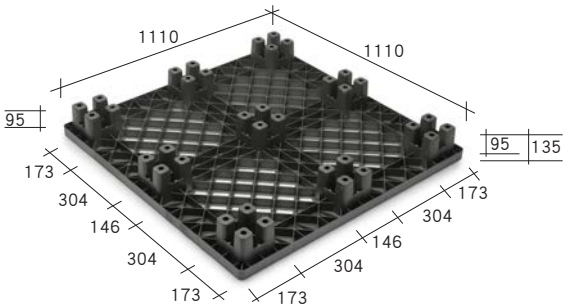

ECJ-120080-135

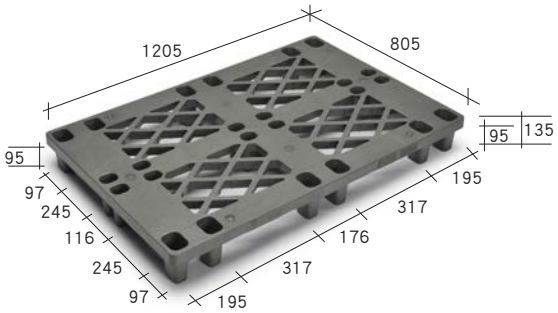

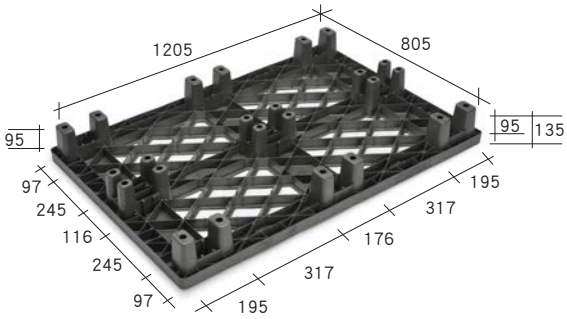

ECJ-120100-135

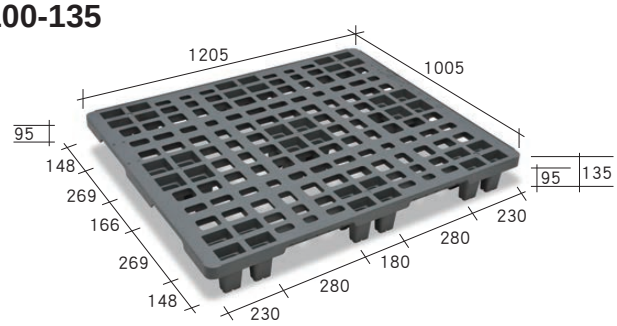

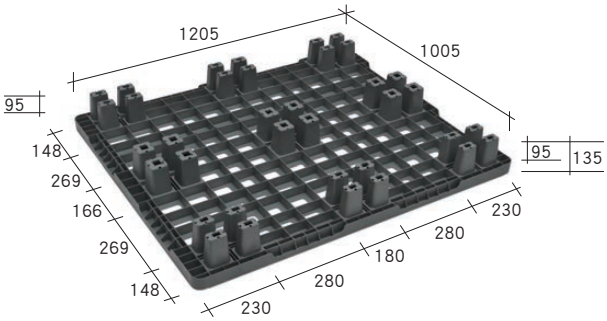

EJ-110110-138

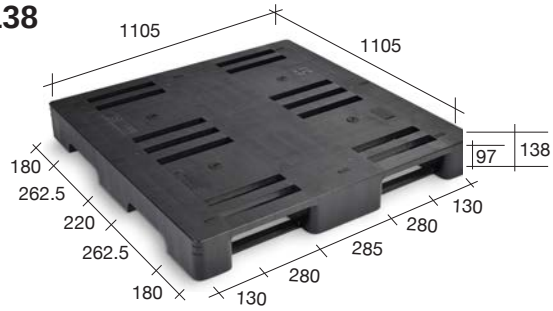

EJ-110110-140

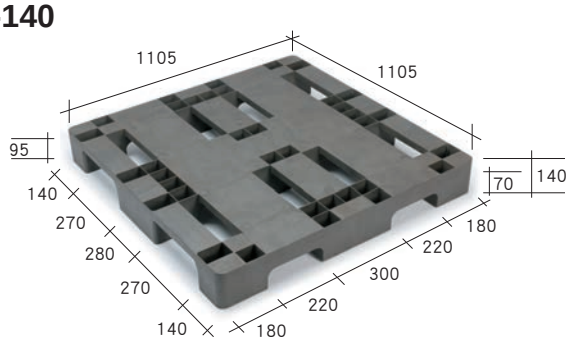

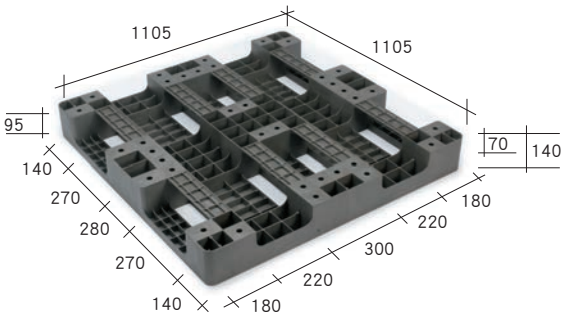

EJ-110110-140-3

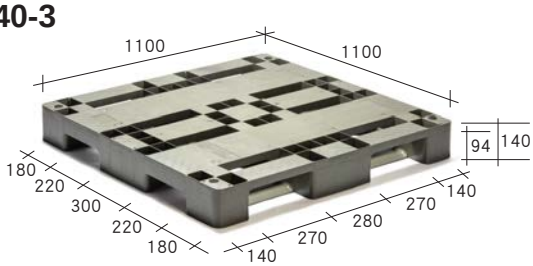

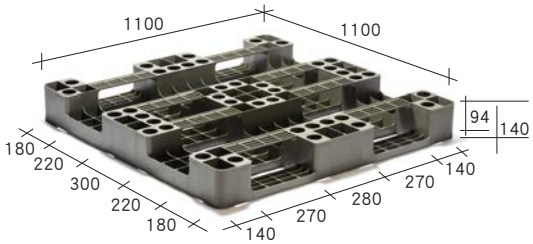

型號 Model No.	尺寸 Size (mm)			承載面 Loading Side	插口數 Entry Gap	荷重(噸) Loading Capacity (Ton)		輸送帶使用 Conveyor Transiting	托板車使用 Adaptability Transiting	
	長 Length	寬 Width	高 Height	單面 Single	4向 4 Way	靜荷重 Static	動荷重 Dynamic		2向 2 Way	4向 4 Way
E-110110-138	1105	1105	138	○	○	4.0	2.0	○	○	
E-110110-140	1105	1105	140	○	○	3.0	2.2	○	○	
E-120100-136	1205	1005	136	○	○	3.0	2.3	○	○	
ECJ-100100-130	1000	1000	130	○	○	1.0	0.625			○
ECJ-060050-134	605	505	134	○	○	1.0	0.2		○	
ECJ-110110-135	1110	1110	135	○	○	1.5	1.3			○
ECJ-120080-135	1205	805	135	○	○	1.5	1.3			○
ECJ-120100-135	1205	1005	135	○	○	1.8	1.4			○
EJ-110110-138	1105	1105	138	○	○	3.5	2.0	○	○	
EJ-110110-140	1105	1105	140	○	○	3.5	2.2	○	○	
EJ-110110-140-3	1100	1100	140	○	○	3.0	2.2	○	○	

註：1. 荷重欄位係以PP耐衝擊材質所製作棧板之測試數據，動荷重係棧板寬邊或有下面板側所能承重。
2. 荷重欄位皆僅供參考，並視實際使用情況而有所不同，亦不做任何商業證明使用。
3. 尺寸欄位為參考值，實際尺寸以棧板實物為準。
4.上表打"○"記號表示適用。

Note：1.The data of Loading Capacity is based on the test of the pallet made of the impact PP material. Dynamic loads refer to the load capacity of the width direction or on the direction with the bottom decks.
2.The data of Loading Capacity is for reference only and is subject to the actual using condition, also not served as any commercial certification.
3.The data of Size is for reference only and the actual size is subject to the actual pallets.
4.The "○" mark of table indicates "applicable to" .

南亞塑膠棧板之種類 · SPECIES OF NAN YA PLASTIC PALLET

· FCU型 / FCUJ型

可供一般現場運轉及內銷一般出貨裝載使用，堆高機及托板車皆可作業。

· FCU Type / FCUJ Type

Suitable for in-plant transport and domestic cargo carrying applications, fit for forklift and trailer.

FCU / FCUJ型
FCU / FCUJ TYPE

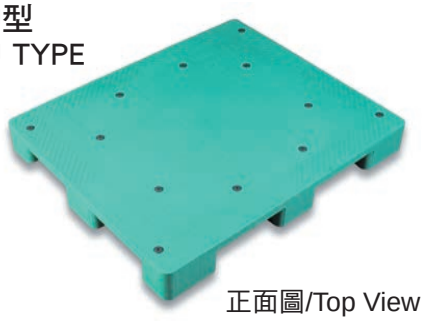

正面圖/Top View

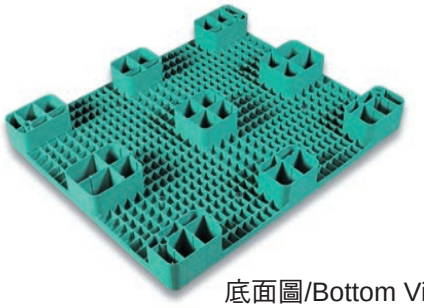

底面圖/Bottom View

FCU-100100-085

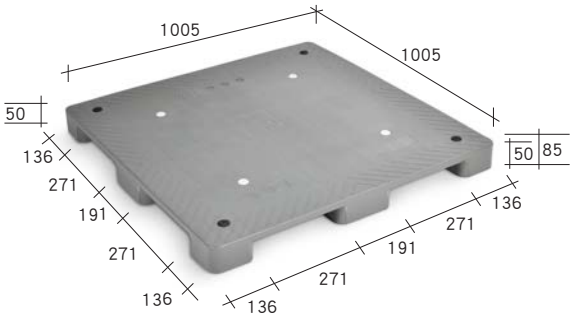

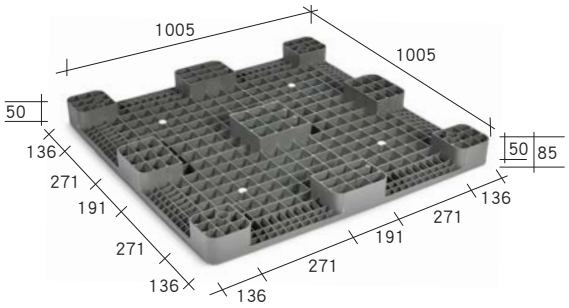

FCU-100100-130

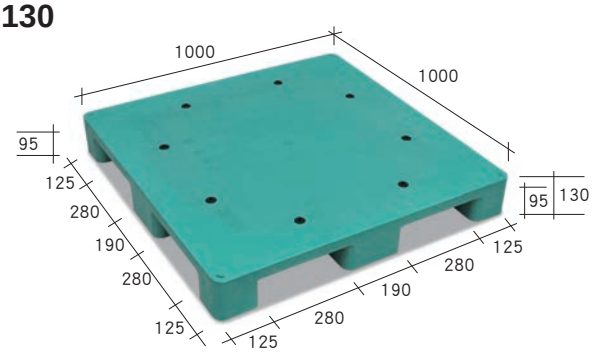

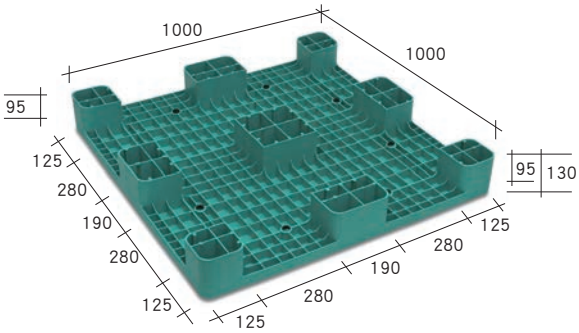

FCU-110110-130

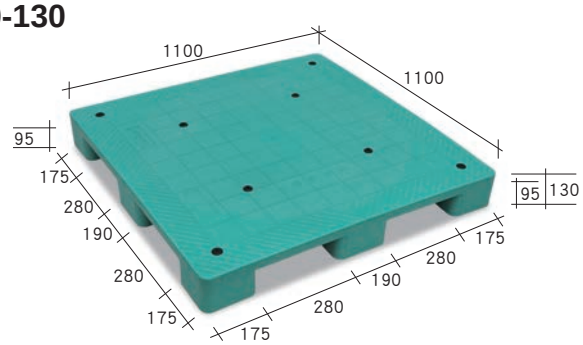

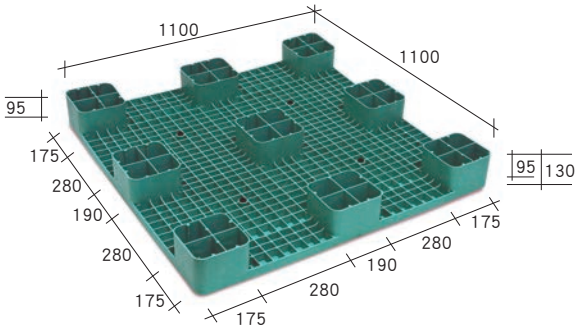

FCU-120080-130

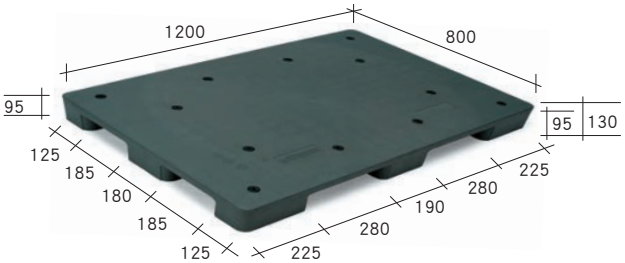

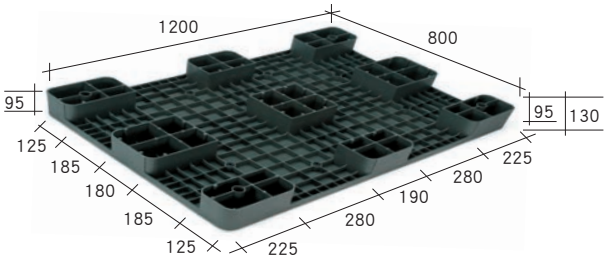

FCU-120100-130

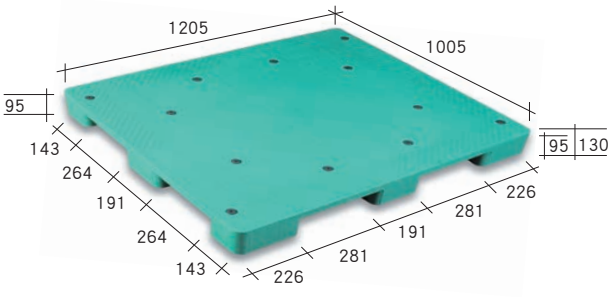

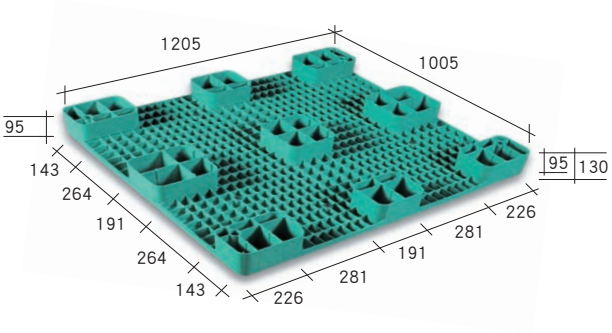

FCU-140110-130

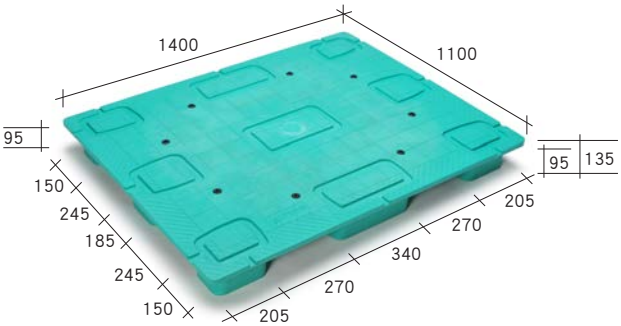

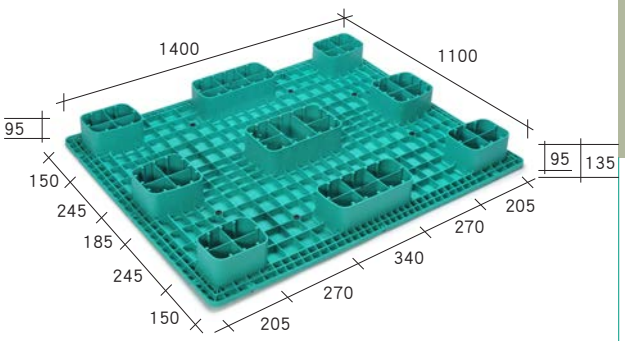

FCUJ-100100-130

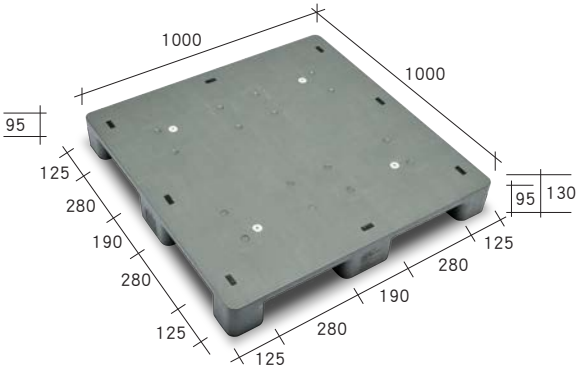

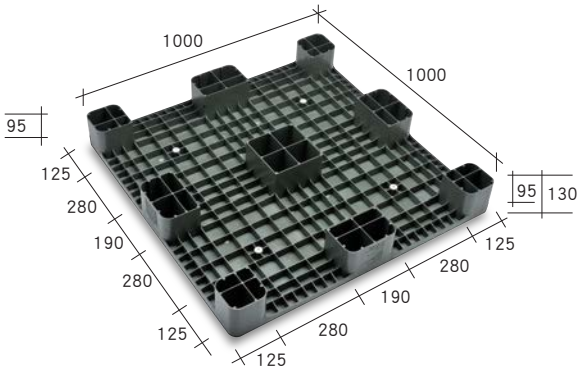

FCUJ-100100-85

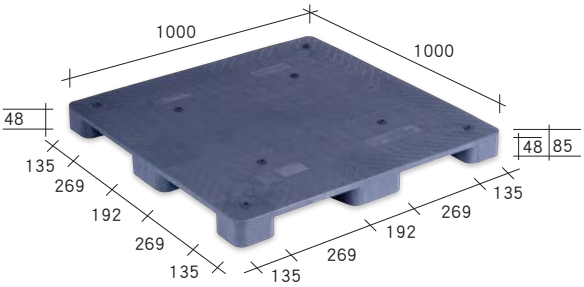

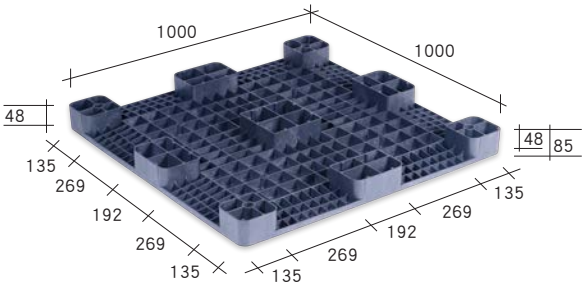

FCUJ-120100-130

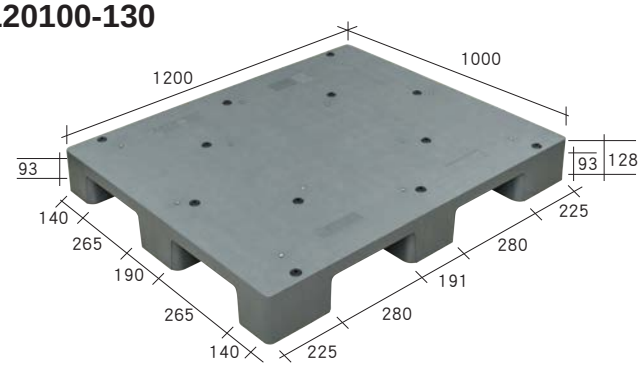

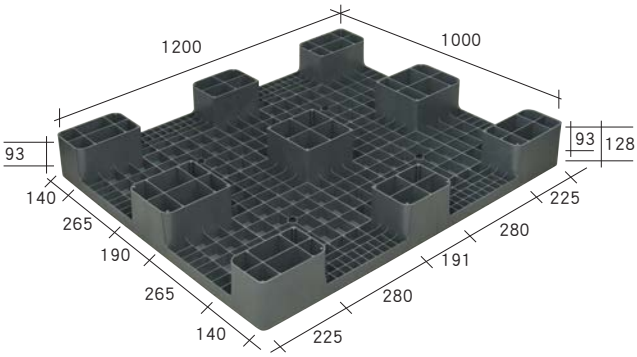

FCUJ-120100-130-2

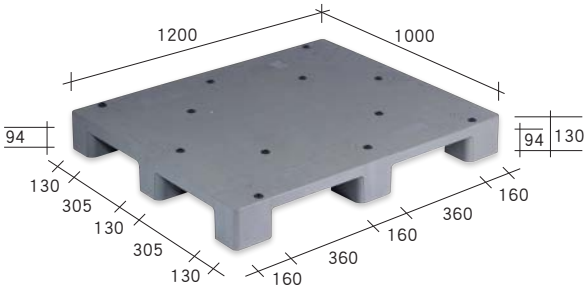

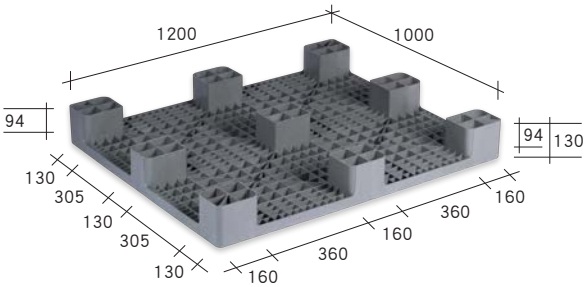

型號 Model No.	尺寸 Size (mm)			承載面 Loading Side	插口數 Entry Gap	荷重(噸) Loading Capacity (Ton)		輸送帶使用 Conveyor Transiting	托板車使用 Adaptability Transiting	
	長 Length	寬 Width	高 Height	單面 Single	4向 4 Way	靜荷重 Static	動荷重 Dynamic		2向 2 Way	4向 4 Way
FCU-100100-085	1005	1005	85	○	○	4.0	3.0			
FCU-100100-130	1000	1000	130	○	○	4.2	4.0			○
FCU-110110-130	1100	1100	130	○	○	4.2	4.0			○
FCU-120080-130	1200	800	130	○	○	4.2	3.0			○
FCU-120100-130	1205	1005	130	○	○	4.0	3.0			○
FCU-140110-130	1400	1100	135	○	○	4.0	3.5			○
FCUJ-100100-130	1000	1000	130	○	○	3.5	3.0			○
FCUJ-100100-85	1000	1000	85	○	○	3.5	3.0			
FCUJ-120100-130	1200	1000	130	○	○	4.0	3.0			○
FCUJ-120100-130-2	1200	1000	130	○	○	4.0	3.0			○

註：1. 荷重欄位係以PP耐衝擊材質所製作棧板之測試數據，動荷重係棧板寬邊所能承重。
2. 荷重欄位皆僅供參考，並視實際使用情況而有所不同，亦不做任何商業證明使用。
3. 尺寸欄位為參考值，實際尺寸以棧板實物為準。
4.上表打"○"記號表示適用。

Note：1.The data of Loading Capacity is based on the test of the pallet made of the impact PP material. Dynamic loads refer to the load capacity of the width direction.
2.The data of Loading Capacity is for reference only and is subject to the actual using condition, also not served as any commercial certification.
3.The data of Size is for reference only and the actual size is subject to the actual pallets.
4.The "○" mark of table indicates "applicable to" .

南亞塑膠棧板的尺寸管制標準・SIZE CONTROL STANDARD OF NAN YA PLASTIC PALLET

單位(Unit) : mm

邊 Side		長度及寬度 Length & Width			高度 Height		
材質Material		CP, R, PP & FP	PE	PP-K	CP, R, PP & FP	PE	PP-K
棧板型式 Pallet type	D, DC, DCJ, F, FC	+2 -8	+0 -10	+5 -5	+0 -6	+0 -8	+3 -5
	SCJ, SJ, E, ECJ, EJ, FCU, DJ, FCUJ	+0 -10	+0 -12	+5 -5	+3 -5	+2 -8	+3 -5
	SC	+2 -10	+0 -12	+5 -5	+3 -5	+2 -8	+3 -5
	FCJ	+2 -8	+0 -10	+10 -5	+3 -5	+3 -5	+3 -5
	PBJ	+0 -15	+0 -15	+5 -5	+3 -5	+2 -8	+3 -5

註：以下規格不適用上表公差標準：D-140120-160、D-150150-180、F-140120-160。

Note：The above tolerance standards do not apply to the following specifications: D-140120-160, D-150150-180, F-140120-160.

訂製品・CUSTOM-MADE

可配合客戶需求開發新規格。

Any other new specifications can be developed as customer's request.

・導電、靜電消散及抗靜電塑膠棧板

可隨客戶不同需求，提供表面阻抗率在10^5Ω/SQ～10^{12}Ω/SQ範圍內之塑膠棧板產品。

・Conductive, ESD & Anti-static Electricity Plastic Pallet

We can submit the conductive, ESD & anti-static electricity Plastic Pallets in which the surface resistivity is about 10^5Ω/SQ~10^{12}Ω/SQ.

導電、靜電消散及抗靜電塑膠棧板
Conductive, ESD & Anti-static Electricity Plastic Pallet

正面圖/Top View

南亞塑膠棧板使用注意事項 · TERMS & CONDITIONS

◆棧板使用注意事項：

1. 使用自動倉庫型棧板時，需先確認荷重不可超出棧板設計值，不清楚設計值時，可以變形量佔支撐架跨距1.2%時之荷重以下使用。上架時，應以長邊或有插口邊置於支撐架上為原則。
2. 棧板存放散裝物件，可設置柵欄防護，或將物件捆綁固定，確保作業安全性。
3. 棧板存放油桶務必設置高度超過油桶高度1/2以上之柵欄防護，或將物件捆綁固定，並直立存放避免橫放。
4. 自動倉庫型棧板鏈式輸送帶鏈條位置，請設置於棧板止滑墊位置，棧板輸送較平穩。
5. 棧板使用堆高機作業時，請對準插口中心，運搬中貨叉請保持上仰，可順利作業，以延長棧板使用壽命。
6. 棧板使用油壓拖板車作業時，請對準插口中心，運搬中貨叉請上昇，使棧板離開地面，可順利作業，以延長棧板使用壽命。
7. 需於自動倉庫架台存放或多層（三層(含)以上）疊放時，請改使用自動倉庫型棧板。
8. 棧板僅供載物荷重用，不得改造、變更或再加工後使用，且損壞後不得再用。
9. 避免長時間暴露在太陽光底下，及須遠離火源。

◆Instructions of using pallets :

1. Before using the automatic warehouse pallets, it is necessary to confirm that the load cannot exceed the designated loading capacity. If the requirement of loading capacity is not available, use the pallet according as the deformation level is less than 1.2% of the support frame span. When placed in the frame stage, the long sides or the fork entry sides should be on the shelves in principle.
2. Upon loading bulk-type articles on the pallet, be sure to install the guardrail for protection or tie the articles securely to ensure to operate safely.
3. Upon placing barrels on the pallet, the guardrail in height over 1/2 of the barrels must be installed or bundled with fixed objects and the barrels shall be settled vertically instead of being placed horizontally.
4. The chain-type conveyor belt for the automatic warehouse must be installed at the anti-slipped pads of the pallet for smoother pallet conveyance.
5. Upon using forklift to move the pallet, be sure to point towards the center of the entries. During moving, the forks must point upward to achieve smoother operation and prolong the lifespan of pallet.
6. Upon using hydraulic trailer car to move the pallet, be sure to point towards the center of the entries and raise the forks during moving to lift the pallet off the ground in order to achieve smoother operation and prolong the lifespan of pallet.
7. If the automatic warehouse shelf storage or multi-layer (three layers (or more)) stacking is required, change to use the automatic warehouse pallets such as Models of: D, DJ, DC, DCJ, SC, SCJ, SJ, F, FC, FCJ.
8. For loading only, any transformation, change, or after further processing use is strictly prohibited, and may not be reused after damage.
9. Avoid prolonged exposure in the sun, and should to be away from sources of ignition.

南亞塑膠棧板型式指南・GUIDE TO PURCHASE A SUITABLE PLASTIC PALLET

項目 Items		自動倉庫 Warehouse			輸送設備 Conveyor device			運搬載具 Transport tools	
		重載 (>1噸) Heavy-duty (over 1 Ton)	中載 (0.7~1噸) Mid-duty (0.7~ 1Ton)	輕載 (<0.7噸) Light-duty (Below 0.7 Ton)	兩鍊式鍊條輸送機 Two-chains conveyor	三鍊式鍊條輸送機 Three-chains conveyor	滾輪輸送機 Roller conveyor	僅用堆高機 Forklift only	堆高機及托板車 Both forklift and trailer
棧板型式 Pallet type	雙面二插 Double Sides/ 2 Way Entry	D	D, DJ	D, DJ	D, DJ	D, DJ	D, DJ	D, DJ	
	雙面四插 Double Sides/ 4 Way Entry	DC, DCJ	DC, DCJ	DC, DCJ	DC, DCJ	DC, DCJ	DC, DCJ	DC, DCJ	
	單面二插 Single Side/ 2 Way Entry	F	F, SJ	F, SJ	F, SJ	F, SJ	F, SJ		F, SJ
	單面四插 Single Side/ 4 Way Entry		SC, FC, SCJ, FCJ	SC, SCJ, FC, FCJ		SC, SCJ, FC, FCJ, E, EJ	SC, SCJ, FC, FCJ, E, EJ		SC, SCJ, FC, FCJ, E, FCU, FCUJ, ECJ, EJ

材質註記 Material Remark	適用場合 Available Situation	備註 Remarks
PP-K (加強型PP)	可重覆使用 Repeated use is acceptable	
CP (耐衝擊1.5M PP)	可重覆使用 Repeated use is acceptable	1.5M高度墜落測試三次不破 No broken from a height of 1.5 meters after drop tests three times.
R (耐衝擊1.0M PP)	可重覆使用 Repeated use is acceptable	1.0M高度墜落測試三次不破 No broken from a height of 1 meter after drop tests three times.
PP (一般PP)	出貨使用 Export pallet	
FP(100%再生PP) 環保標章產品認證材質 Green Mark product, composed of 100% recycled PP	出貨使用 Export pallet	
PE	適用冷凍、冷藏環境 Applicable frozen, refrigerated environment	

註：因使用環境差異請慎選適合之棧板。

Note：The use of environmental differences, please carefully choose your applicable pallets.

南亞塑膠棧板標準色水・STANDARD COLORS OF NAN YA PLASTIC PALLET

CP(R)材質/ CP(R) material

CP(R) 089 | CP(R) 6H0 | CP(R) 8H0 | CP(R) 024 | CP(R) 168 | CP(R) 2C0

CP(R) 6B0 | CP(R) 8B0

PP材質/ PP material

PP 6H0 | PP 024 | PP 8H0 | PP 068

FP材質(環保標章產品認證材質)/ FP material(Green Mark product, composed of 100% recycled PP)

FP 024 | FP 068

PE材質/ PE material

PE 6D0 | PE 6C0

註：以上色卡為近似色，僅供參考用，若有不一致者，皆以成品為準。

Note：Above color patterns are approximate only, if any inconsistency is subject to the finished product.

1. 台塑麥寮資材中心自動倉庫
   Material Distribution

2. 台塑林園聚乙烯廠自動倉庫
   Petroleum Industry

3. 南亞新港CCL廠生產線滾輪輸送
   Electronics Industry

4. 台塑麥寮聚乙烯廠自動倉庫
   Chem-material Industry

5. 台化新港原絲廠生產線滾輪輸送
   Textile Industry

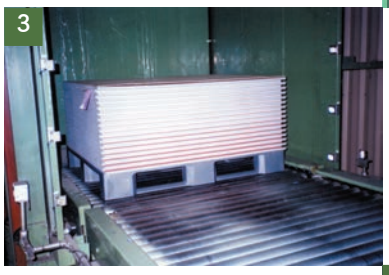

南亞塑膠棧板網頁

(2025.07)

南亞塑膠工業股份有限公司
NAN YA PLASTICS CORPORATION

塑膠第三事業部・**PLASTICS 3rd DIV.**

台北市114南京東路六段380號　電話：(02) 2717-8173
NO.380, SEC.6, NANJING E.RD, TAIPEI, TAIWAN, R.O.C.
CABLE：〝NAN YA TAIPEI〞 TELEX：11246 PLASTICORP TAIPEI
TEL：(02) 2717-8173 FAX：(02) 2514-0628
https://www.nan-ya-pallet.com